TPL-0414M5M
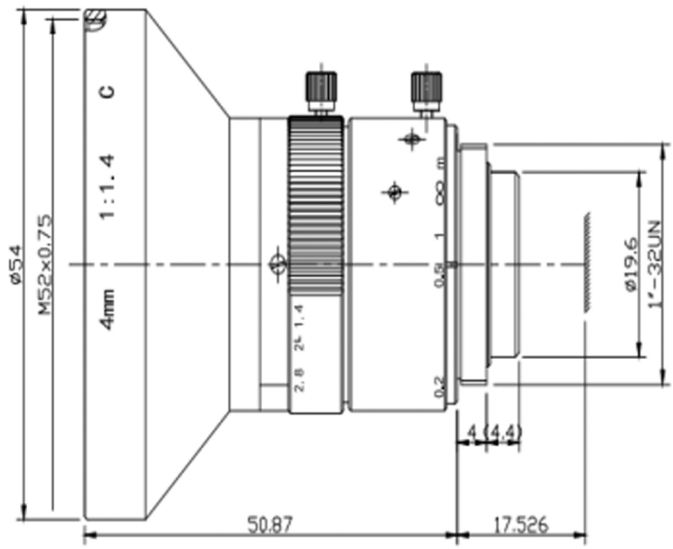
Resolution		150lp/mm
Sensor size		1/2"
Mount		C-Mount
Focal Length		4mm
F Number		F1.4-F32
BFL		10.33mm
Aperture Type		M-Iris
Field Angle(D×V×H)	1/2"	85°x58.76°x75.12°
	1/3"	73.74°x48.46°x61.93°
	1/4"	53.13°x33.4°x43.6°
Distortion		<-1.5%
Working Distance		0.1m-∞
Wavelength		400-700nm
Filter size		M52×0.75
Size		54x50.87
Weight		142g