ToupTek Digital System Accessories

Sept. 2022

Product Catalog

ToupTek Digital System Accessories 1

1 Update History 1

2 Introduction to ToupTek and Its Products 2

2.1 About ToupTek Photonics 2

3 Eyepiece Tube to C-Mount Adapter 3

3.1 23.2mm Eyepiece to C-mount Adjustable Microscope Eyepiece Adapter 3
3.2 23.2mm Eyepiece to C-mount Fixed Microscope Eyepiece Adapter 4
3.3 31.75mm Eyepiece to C-mount Adjustable Telescope Eyepiece Adapter 5
3.4 31.75mm Eyepiece to C-mount Fixed Telescope Eyepiece Adapter 6

4 Olympus, Leica, Nikon, Zeiss Phototube to X-Mount Adapter 7

4.1 Olympus TV Adapter 7
4.1.1 Characteristic *7*
4.1.2 Specifications *7*
4.2 Zeiss 95 Series Microscope TV Adapter 9
4.2.1 P95 Series Zeiss Characteristic *9*
4.2.2 Specifications for the P95 series adapter *9*
4.3 Zeiss 60N-C, 60N-T2 Series TV Adapter 11
4.3.1 60N-C, 60N-T2 60N-M52 Series TV Adapter Characteristic for Zeiss Microscope *11*
4.3.2 Specifications for the 60N-M52, 60N-C or 60N-T2 series adapter *11*
4.4 LEICA TV Adapter 14
4.4.1 Characteristic *14*
4.4.2 Specifications *14*
4.5 NIKON TV Adapter 16
4.5.1 Characteristic *16*
4.5.2 Specification *16*
4.6 HUVITZ TV Adapter 18
4.6.1 Characteristic *18*
4.6.2 Specifications *18*
4.7 Labomed TV Adapter 20
4.7.1 Characteristic *20*
4.7.2 Specifications *20*

5 Microscope 23.2 to 30, 30.5, 30.75 Eyepiece Converter 22

5.1 The Basic Characteristic of the Eyepiece Converter 22
5.2 Specification of the Eyepiece Converter 22

6 ToupTek Lens for Machine Vision 23

6.1 TP-1632ZL5M (16mm~32mm, 1” Format) 23
6.1.1 Specification *23*
6.1.2 Drawing and Optical Performance *23*
6.2 TPWA Series Lens with CS-mount 25
6.3 TP3MP Series Lens with CS-mount 26
6.4 TP2MP Series Lens with CS-mount 27
6.5 TP1MP Series Lens with CS-mount 28
6.6 FA-A Series Machine Vision Lens (1/1.9” 6M Resolution) 29
6.6.1 Characteristic *29*
6.6.2 Specifications (7) *29*
6.6.3 Lens Layout *29*
6.7 FA-B Series Machine Vision lens (2/3” 6M Resolution) 30
6.7.1 Lens Characteristic *30*
6.7.2 Specifications (6) *30*
6.7.3 Lens Layout *30*
6.8 FA-C Series Machine Vision Lens(1” 10M Resolution) 31
6.8.1 Lens Characteristic *31*

6.8.2 Specifications(5) *31*
6.8.3 Lens Layout *31*
6.9 FA-D and FA-E Series Telecentric Lens 32
6.9.1 Lens Characteristic *32*
6.9.2 Specifications (18) *32*
6.9.3 Lens Layout *32*
7 Monocular Zoom Objective(MZO) **33**
7.1 TZM0756 MZO 33
7.1.1 The Configuration of TZM0756 MZO with Five Modules *33*
7.1.2 TZM0756 MZO's Middle Zoom Module *34*
7.1.3 TZM0756 MZO's Auxiliary Lens *34*
7.1.4 TZM0756 MZO's TV Lens *34*
7.1.5 TZM0756 MZO's Bracket Adapter *35*
7.1.6 TZM0756 MZO's Optional Module *35*
7.1.7 The Optical Specifications of TZM0756 MZO with Different Auxiliary &TV Lens *35*
7.1.8 The Dimension of TZM0756 MZO with Different Light Module *36*
7.1.9 How to Configure TZM0756 MZO *37*
7.1.10 TZM0756 MZO's Packing List *37*
7.1.11 Order List of TZM0756 MZO *38*
7.2 TZM0745A MZO 40
7.2.1 The Configuration of TZM0745A MZO with Five Modules *40*
7.2.2 TZM0745A MZO's Middle Zoom Module *41*
7.2.3 TZM0745A MZO's Auxiliary Lens *41*
7.2.4 TZM0745A MZO's TV Lens *42*
7.2.5 TZM0745A MZO's Bracket Adapter *42*
7.2.6 TZM0745A MZO's The Optional Module *43*
7.2.7 The Optical Specifications of TZM0745A MZO with Different Auxiliary &TV Lens *43*
7.2.8 The Dimension of TZM0745A MZO with Different Light Module *43*
7.2.9 How to Configure TZM0745A MZO *44*
7.2.10 TZM0745A MZO Packing List *45*
7.2.11 Order List of TZM0745A MZO *45*
7.3 TZM0745B MZO 48
7.3.1 The Configuration of TZM0745B MZO with Five Modules *48*
7.3.2 TZM0745B MZO's Middle Zoom Module with Preconfigured Auxiliary Lens, TV Lens *49*
7.3.3 TZM0745B MZO's Auxiliary Lens *49*
7.3.4 TZM0745B MZO's TV Lens *49*
7.3.5 TZM0745B MZO's Bracket Adapter Module *49*
7.3.6 TZM0745B MZO's Optional Module *50*
7.3.7 The Optical Specifications of TZM0745B MZO with Different Auxiliary &TV Lens *50*
7.3.8 The Dimension of TZM0745B MZO with Auxiliary Lens and TV Lens Configuration *50*
7.3.9 TZM0745B MZO Packing List *51*
7.3.10 Order List of TZM0745B MZO *51*
7.4 TZM0480 MZO 52
7.4.1 The Configuration of TZM0480 MZO with Five Modules *52*
7.4.2 TZM0480 MZO's Middle Zoom Module *53*
7.4.3 TZM0480 MZO's Auxiliary Lens *53*
7.4.4 TZM0480 MZO's TV Lens *53*
7.4.5 TZM0480 MZO's Bracket Adapter *54*
7.4.6 TZM0480 MZO's Optional Module *54*
7.4.7 The Optical Specifications of TZM0480 MZO with Different Auxiliary &TV Lens *54*
7.4.8 The Dimension of TZM0480 MZO with Different Light Module *54*
7.4.9 How to Configure TZM0480 MZO *55*
7.4.10 TZM0480 MZO's Packing List *55*
7.4.11 Order List of TZM0480 MZO *56*
7.5 TZM0460 MZO 58
7.5.1 The Configuration of TZM0460 MZO with Five Modules *58*
7.5.2 TZM0460 MZO's Middle Zoom Module *59*
7.5.3 TZM0460 MZO's Auxiliary Lens *59*
7.5.4 TZM0460 MZO's TV Lens *59*
7.5.5 TZM0460 MZO's Bracket Adapter *60*
7.5.6 TZM0460 MZO's Optional Module *60*
7.5.7 The Optical Specifications of TZM0460 MZO with Different Auxiliary &TV Lens *60*

7.5.8 The Dimension of TZM0460 MZO with Different Light Module ... 60
7.5.9 How to Configure TZM0460 MZO ... 61
7.5.10 TZM0460 MZO's Packing List ... 61
7.5.11 Order List of TZM0460 MZO ... 62
7.6 TZM0440 MZO ... 64
7.6.1 The Configuration of TZM0440 MZO with Five Modules ... 64
7.6.2 TZM0440 MZO's Middle Zoom Module ... 65
7.6.3 TZM0440 MZO's Auxiliary Lens ... 65
7.6.4 TZM0440 MZO's TV Lens ... 65
7.6.5 TZM0440 MZO's Bracket Adapter ... 66
7.6.6 TZM0440 MZO's Optional Module ... 66
7.6.7 The Optical Specifications of TZM0440 MZO with Different Auxiliary &TV Lens ... 66
7.6.8 The Dimension of TZM0440 MZO with Different Light Module ... 66
7.6.9 How to Configure TZM0440 MZO ... 67
7.6.10 TZM0440 MZO's Packing List ... 67
7.6.11 Order List of TZM0440 MZO ... 68
7.7 TZM0660 MZO ... 70
7.7.1 The Configuration of TZM0660 MZO with Five Modules ... 70
7.7.2 TZM0660 MZO's Middle Zoom Module ... 71
7.7.3 TZM0660 MZO's Auxiliary Lens ... 71
7.7.4 TZM0660 MZO's TV Lens ... 71
7.7.5 TZM0660 MZO's Bracket Adapter ... 72
7.7.6 TZM0660 MZO's Optional Module ... 72
7.7.7 The Optical Specifications of TZM0660 MZO with Different Auxiliary &TV Lens ... 72
7.7.8 The Dimension of TZM0660 MZO with Different Light Module ... 72
7.7.9 How to Configure TZM0660 MZO ... 73
7.7.10 TZM0660 MZO's Packing List ... 73
7.7.11 Order List of TZM0660 MZO ... 74
7.8 TZM0640 MZO ... 76
7.8.1 The Configuration of TZM0640 MZO with Five Modules ... 76
7.8.2 TZM0640 MZO's Middle Zoom Module ... 77
7.8.3 TZM0640 MZO's Auxiliary Lens ... 77
7.8.4 TZM0640 MZO's TV Lens ... 77
7.8.5 TZM0640 MZO's Bracket Adapter ... 78
7.8.6 TZM0640 MZO's Optional Module ... 78
7.8.7 The Optical Specifications of TZM0640 MZO with Different Auxiliary &TV Lens ... 78
7.8.8 The Dimension of TZM0640 MZO with Different Light Module ... 78
7.8.9 How to Configure TZM0640 MZO ... 79
7.8.10 TZM0640 MZO's Packing List ... 79
7.8.11 Order List of TZM0640 MZO ... 80
7.9 TZM0880 MZO ... 82
7.9.1 The Configuration of TZM0880 MZO with Five Modules ... 82
7.9.2 TZM0880 MZO's Middle Zoom Module ... 83
7.9.3 TZM0880 MZO's Auxiliary Lens ... 83
7.9.4 TZM0880 MZO's TV Lens ... 83
7.9.5 TZM0880 MZO's Bracket Adapter ... 84
7.9.6 TZM0880 MZO's Optional Module ... 84
7.9.7 The Optical Specifications of TZM0880 MZO with Different Auxiliary &TV Lens ... 84
7.9.8 The Dimension of TZM0880 MZO with Different Light Module ... 84
7.9.9 How to Configure TZM0880 MZO ... 85
7.9.10 TZM0880 MZO's Packing List ... 85
7.9.11 Order List of TZM0880 MZO ... 86

8 The Light Source for MZO/AFDM ... 88

8.1 Angle Adjustable LED Ring Light AALRL-200-7650 ... 88
8.2 The Light Source for TZM0756 MZO ... 90
8.2.1 TZM0756 Series Light Source ... 90
8.2.2 TZM0756 Series Light Source Packing Information ... 91
8.3 The Light Source for TZM0745B MZO ... 93
8.3.1 TZM0745B Series Light Source Module ... 93
8.3.2 The Packing Information of Light Source for TZM0745B MZO ... 93

9 Stand for MZO /AFDM ... 94

9.1 Bracket for Stand 94
9.2 Base for Stand 95
9.3 Microscope Stand 95
9.4 TPS-600 Series Stand with Different Bracket 100

10 Portable Digital Microscope 104

10.1 TSCOPE Portable USB Microscope 104
10.1.1 PUM's Basic Characteristics 104
10.1.2 PUM's Hardware Specification (7) 106
10.1.3 HH153 Optical Specification for PUM 107
10.1.4 Accessary for PUM 108
10.1.5 Packing Information for PUM 109
10.1.6 Sample Images Captured with PUM51000KPA-153 110
10.2 ZOPE Series Continuous Zoom Digital Microscope 112
10.2.1 The Basic Characteristic of ZOPE 112
10.2.2 ZOPE Series Digital Microscope Module List 113
10.2.3 Zoom Lens for ZOPE Series Digital Microscope 114
10.2.4 Camera Modules for ZOPE Series Digital Microscope 115
10.2.5 Dimension of ZOPE 116
10.2.6 Packing Information for ZOPE Series Digital Microscope 117
10.3 HCAM Series Potable USB2.0 Microscope 118
10.3.1 HCAM's Basic Characteristic 118
10.3.2 Specification of HCAM Series Portable USB Microscope 120
10.3.3 Accessory for HCAM Series Portable USB Microscope 122

11 Stands for the Potable Microscope 123

11.1 M-SD-HM1 Potable Microscope Stand 123
11.2 M-SD-HM2 Potable Microscope Stand 124
11.3 M-SD-HM3 Potable Microscope Stand 125
11.4 M-SD-HM4 Potable Microscope Stand 126
11.5 M-SD-HM5 Potable Microscope Stand 127

12 ToupTek®-- Contact Information 128

1 Update History

2 Introduction to ToupTek and Its Products

2.1 About ToupTek Photonics

ToupTek is a manufacturer of machine vision products with image and video as its focus. We concentrate on the development of microscopic cameras, astronomical cameras and machine vision cameras. ToupTek is a witness, practitioner and pusher of global machine vision industry.

ToupTek cameras has the largest market share in the microscope camera industry across the world. Our customers include but not limit to the following:

- North America: United States, Canada, Mexico;
- South America: Colombia, Brazil, Argentina;
- Africa: Morocco, Egypt, South Africa;
- Europe: United Kingdom, Ukraine, Switzerland, Sweden, Spain, Serbia, Norway, Russia, Poland, Netherlands, Moldova, Italy, Hungary, Germany, France, Finland, Denmark, Czech Republic, Bulgaria, Belgium, Austria, Turkey;
- Asia: China, Hong Kong, Taiwan, Thailand, Vietnam, Singapore, Philippines, South Korea, Japan, Malaysia, Indonesia, India, Israel, Iran;
- Oceania: Australia, Nauru, New Zealand worldwide.

ToupTek R&D personnel accounts for 30% of the company's total staff and includes nearly 5 Ph.D.s, 20 masters, and 4 engineers with oversea experience. It is a high-tech company driven by technology and market.

ToupTek adheres to the company motto: “Concentration, Focus, Diligence and Innovation” and implements the strategy of “Where there is eye, there is ToupTek camera; where there is image sensing, there is ToupTek camera”. The mission is to develop video technology to better serve humanity and the future.

3 Eyepiece Tube to C-Mount Adapter

3.1 23.2mm Eyepiece to C-mount Adjustable Microscope Eyepiece Adapter

AMA Specifications

Article Code	Picture	Model	Description	Bar Code
108001		AMA037	1.Available Size for 18 mm Field 18X0.37mm 2.Fit to 1/4”~1/3” Size Sensor 3.0.37X Magnification 4.Manually Focusable 5.Parfocal with the Eyepiece 6.Dia.23.2mm Eyepiece Tube to C-Mount	108001
108002		AMA050	1.Available Size for 18 mm Field 18X0.50mm 2.Fit to 1/2”~2/3” Size Sensor 3.0.50X Magnification 4.Manually Focusable 5.Parfocal with the Eyepiece 6.Dia.23.2mm Eyepiece Tube to C-Mount	108002
108003		AMA075	1.Available Size for 18 mm Field 18X0.75mm 2.Fit to 1/1.8”~1” Size Sensor 3.0.75X Magnification 4.Manually Focusable 5.Parfocal with the Eyepiece 6.Dia.23.2mm Eyepiece Tube to C-Mount	108003
108004		AMA100	1.Available Size for 18 mm Field 18X1.00mm 2.Fit to 1”~1.1” Size Sensor 3.1X Magnification 4.Manually Focusable 5.Parfocal with the Eyepiece 6.Dia.23.2mm Eyepiece Tube to C-Mount	

*To cover the field, the sensor size should be smaller than the available size. ToupTek’s experts will help you to select the correct Adapter for your ordered microscope camera. What you need to do is to select the right camera model.

3.2 23.2mm Eyepiece to C-mount Fixed Microscope Eyepiece Adapter

FMA Specifications

Article Code	Picture	Model	Description	Bar Code
108005		FMA037	1.Available Size for 18 mm Field 18X0.37mm 2.Fit to 1/4”~1/3” Size Sensor 3.0.37X Magnification 4.Dia.23.2mm Eyepiece Tube to C-Mount	108005
108006		FMA050	1.Available Size for 18 mm Field 18X0.50mm 2.Fit to 1/2”~2/3” Size Sensor 3.0.50X Magnification 4.Dia.23.2mm Eyepiece Tube to C-Mount	108006
108007		FMA075	1.Available Size for 18 mm Field 18X0.75mm 2.Fit to 1/1.8”~1” Size Sensor 3.0.75X Magnification 4.Dia.23.2mm Eyepiece Tube to C-Mount	108007
1080081		FMA100	1.Available Size for 18 mm Field 18X1.00mm 2.Fit to 1” Size Sensor 3.1.00X Magnification 4.Dia.23.2mm Eyepiece Tube to C-Mount	

*To cover the field, the sensor size should be smaller than the available size. ToupTek’s experts will help you to select the correct Adapter for your ordered microscope camera. What you need to do is to select the right camera model.

3.3 31.75mm Eyepiece to C-mount Adjustable Telescope Eyepiece Adapter

ATA Specifications

Article Code	Picture	Model	Description	Bar Code
108008		ATA037	1.Fit to 1/4” ~ 1/3” Size Sensor 2.0.37X Magnification 3.Manually Focusable 4.Parfocal with the Eyepiece 5.C-Mount to Dia.31.75mm eyepiece tube	108008
108009		ATA050	1.Fit to 1/2” ~ 2/3” Size Sensor 2.0.50X Magnification 3.Manually Focusable 4.Parfocal with the Eyepiece 5.C-Mount to Dia.31.75mm eyepiece tube	108009
108010		ATA075	1.Fit to 1/1.8” ~ 1” Size Sensor 2.0.75X Magnification 3.Manually Focusable 4.Parfocal with the Eyepiece 5.C-Mount to Dia.31.75mm eyepiece tube	108010

*To cover the field, the sensor size should be smaller than the available size. ToupTek’s experts will help you to select the correct Adapter for your ordered microscope camera. What you need to do is to select the right camera model.

3.4 31.75mm Eyepiece to C-mount Fixed Telescope Eyepiece Adapter

FTA Specifications

Article Code	Picture	Model	Description	Bar Code
108011		FTA037	1.Fit to 1/4” ~ 1/3” Size Sensor 2.0.37X Magnification 3.C-Mount to Dia.31.75mm eyepiece tube	108011
108012		FTA050	1.Fit to 1/2” ~ 2/3” Size Sensor 2.0.50X Magnification 3.C-Mount to Dia.31.75mm eyepiece tube	108012
108013		FTA075	1.Fit to 1/1.8” ~ 1” Size Sensor 2.0.75X Magnification 3.C-Mount to Dia.31.75mm eyepiece tube	108013

*To cover the field, the sensor size should be smaller than the available size. ToupTek’s experts will help you to select the correct Adapter for your ordered telescope camera. What you need to do is to select the right camera model.

4 Olympus, Leica, Nikon, Zeiss Phototube to X-Mount Adapter

4.1 Olympus TV Adapter

4.1.1 Characteristic

- Convert the Olympus trinocular microscope phototube/head/port (have standard 42 mm，1.65 inch inner diameter for the insertion end to phototube) to traditional C-Mount type(25.4 mm or 1 inch diameter with 32 threads per inch), T2 mount type(M42x0.75 mm metric thread) or M52 mount type(M52x0.75mm metric thread);
- With different built-in reduction lens (2.25X, 1.5X,1.2X,1X, 0.8X,0.63X, 0.5X, 0.35X) for achieving better field of view from microscope trinocular head(suitable for 2.7”, 1.8”, 4/3”, 1”, 2/3”, 1/1.8”, 1/2”, 1/2.5”, 1/3” or 1/4” inch CCD or CMOS sensor chips);
- Can be installed in UIS trinocular tube such as : BX series, BX2 series, CX series, CX2 series, MX series;
- Build of material: anodized aluminum;
- Telecentric optics with low light deficiency;
- Parfocal with different microscope objective lenses;
- Diffraction limited MTF;
- Aperture totally coupled with UIS microscope objective’s exit pupil;
- The profile of one end of the adapter connecting to the microscope:

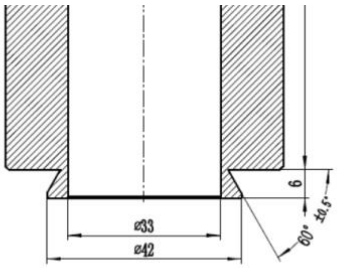

4.1.2 Specifications

Model	Photo	Magnification	Sensor Size	Mount Type
AL225XM52 U-TV2.25XM52		2.25X	2.7”,1.8”, 4/3”, 1”	M52
AL150XT2 U-TV1.5XT2		1.5X	1.8”, 4/3”, 1”, 2/3”	T2-Mount

TOUPTEK PHOTONICS
WE KNOW IMAGES, WE MAKE CAMERAS

Olympus, Leica, Nikon, Zeiss Phototube to X-Mount Adapter

AL120XT2 **U-TV1.2XT2**		1.2X	4/3”,1”	T2-Mount
AL100XC **U-TV1X-2/U-CAMD3**		1.0X	1”, 2/3”	C-Mount
AL080XC **U-TV0.80XC**		0.80X	1”,2/3”	C-Mount
AL063XC **U-TV0.63XC**		0.63X	2/3”,1/1.8”,1/2”	C-Mount
AL050XC **U-TV0.5XC-3**		0.50X	1/1.8”,1/2”,1/2.5”	C-Mount
AL035XC **U-TV0.35XC-2**		0.35X	1/3”,1/4”，1/5”	C-Mount
Supported Microscope	Specially designed for Olympus CKX, CX，BX，MX，STM，SZX，IX，GX(GX41) series microscopes			

TOUPTEK PHOTONICS
WE KNOW IMAGES, WE MAKE CAMERAS

4.2 Zeiss 95 Series Microscope TV Adapter

4.2.1 P95 Series Zeiss Characteristic

- Convert the Zeiss trinocular microscope phototube/head/port (have standard ISO 30 mm, 1.18 inch inner diameter for the insertion end to phototube) to traditional C-Mount type(25.4 mm or 1 inch diameter with 32 threads per inch), T2 mount type(M42x0.75 mm metric thread) or M52 mount type(M52x0.75mm metric thread);
- With different built-in reduction lens (2.25X, 1.5X,1.2X,1X, 0.8X,0.63X, 0.5X, 0.35X) for achieving better field of view from microscope trinocular head(suitable for 2.7”, 1.8”, 4/3”, 1”, 2/3”, 1/1.8”, 1/2”, 1/2.5”, 1/3” or 1/4” inch CCD or CMOS sensor chips);
- Can be installed in Zeiss UIS trinocular tube such as:Zeiss PrimoStar series and Zeiss Primo vert series
- Build of material: anodized aluminum;
- Telecentric optics with low light deficiency;
- Parfocal with different microscope objective lenses;
- Diffraction limited MTF;
- Aperture totally coupled with UIS microscope objective’s exit pupil;
- The profile of one end of the adapter connecting to the microscope:

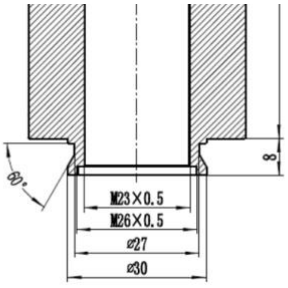

4.2.2 Specifications for the P95 series adapter

Model	Photo	Magnification	Sensor Size	Mount Type
P95-M52-2.7” 2.25X CSP225XM52		2.25X	2.7”,1.8”, 4/3”, 1”	M52
P95-T2-1.8” 1.5X CSP150XT2		1.5X	1.8”, 4/3”, 1”,2/3”	T2-Mount

Olympus, Leica, Nikon, Zeiss Phototube to X-Mount Adapter

CSP120XT2 P95-T2 4/3” 1.2x		1.2X	4/3”，1”	T2-Mount
CSP100XC P95-C 1” 1.0x		1X	1”, 2/3”	C-Mount
CSP080XC P95-C 1” 0.8x(New)		0.8X	1”,2/3”	C-Mount
CSP065XC P95-C 2/3” 0.65x		0.65X	2/3”,1/1.8”,1/2”	C-Mount
CSP050XC P95-C 1/2” 0.50x		0.5X	1/1.8”,1/2”,1/2.5”	C-Mount
CSP035XC P95-C 1/3” 0.35x		0.35X	1/3”,1/4”，1/5”	C-Mount
Supported Microscope	Specially designed for Zeiss Primo Star series , Zeiss Primo vert series			

4.3 Zeiss 60N-C, 60N-T2 Series TV Adapter

4.3.1 60N-C, 60N-T2 60N-M52 Series TV Adapter Characteristic for Zeiss Microscope

- Convert the Zeiss trinocular microscope phototube/head/port (have standard M52x1mm outer diameter for the insertion end to phototube) to traditional C-Mount type(25.4 mm or 1 inch diameter with 32 threads per inch), T2 mount type(M42x0.75 mm metric thread) or M52 mount type(M52x0.75mm metric thread);
- With different built-in reduction lens (2.25X, 1.5X,1.2X,1X, 0.8X,0.63X, 0.5X, 0.35X) for achieving better field of view from microscope trinocular head(suitable for 2.7”, 1.8”, 4/3”, 1”, 2/3”, 1/1.8”, 1/2”, 1/2.5”, 1/3” or 1/4” inch CCD or CMOS sensor chips);
- Can be installed in Zeiss UIS trinocular tube such as Axio series microscope;
- Build of material: anodized aluminum;
- Telecentric optics with low light deficiency;
- Parfocal with different microscope objective lenses;
- Diffraction limited MTF;
- Aperture totally coupled with UIS microscope objective’s exit pupil;
- The profile of one end of the adapter connecting to the microscope:

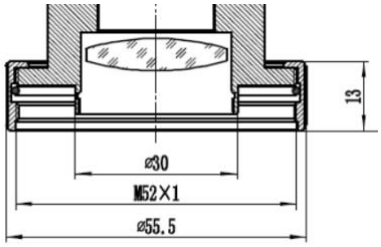

4.3.2 Specifications for the 60N-M52, 60N-C or 60N-T2 series adapter

Model	Photo	Magnification	Sensor Size	Mount Type
CSN225XM52 60N-M52 2.7” 2.25X		2.25X	2.7”,1.8”, 4/3”, 1”	M52
CSN150XT2 60N-T2 1.8" 1.5x		1.5X	1.8”, 4/3”, 1”,2/3”	T2-Mount

CSN120XT2 60N-T2 4/3" 1.2x		1.20X	1”, 4/3”	T2-Mount
CSN100XC 60N-C 1” 1.0x		1.0X	1”, 2/3”	C-Mount
CSN080XC 60N-C 1"0.8x		0.80X	1”,2/3”	C-Mount
CSN063XC 60N-C 2/3" 0.63x		0.63X	2/3”,1/1.8”,1/2”	C-Mount
CSN050XC 60N-C 1/2" 0.5x		0.50X	1/1.8”,1/2”,1/2.5”	C-Mount
Supported Microscope	Axio Examiner.A1; Axio Examiner.D1; Axio Examiner.Z1; Axio Imager Vario; Axio Imager.A1; Axio Imager.A1m; Axio Imager.A2; Axio Imager.A2m; Axio Imager.D1; Axio Imager.D1 for epi-fluorescence with ApoTome equipment; Axio Imager.D1m; Axio Imager.D2; Axio Imager.D2m; Axio Imager.M1 (Axio Imager.M1 for KS ELISPOT); Axio Imager.M1m; Axio **Imager**.M2; Axio Imager.M2m; Axio Imager.Z1; Axio Imager.Z1 + ApoTome; Axio Imager.Z1m; Axio Imager.Z2; Axio Imager.Z2m; Axio Lab.A1; Axio Lab.A1 FL-LED; Axio Lab.A1 MAT; Axio Lab.A1 Pol; Axio Observer.A1; Axio Observer.A1 Entry; Axio Observer.D1; Axio Observer.D1 Entry; Axio Observer.D1 Mid Range; Axio Observer.Z1; Axio Observer.Z1 High End; Axio Scope.A1; Axio Scope.A1 Pol; Axio Scope.A1 Vario; Axio Vert.A1; Axio Vert.A1 FL; Axio Vert.A1 FL-LED; Axio Vert.A1 MAT; Axio Zoom.V16; PALM CombiSystem Rel. 4.2; PALM MicroBeam; PALM MicroBeam Rel.4.2; PALM MicroTweezers Rel.4.2; Stemi 508 doc; Stemi 508 trino; SteREO Discovery.V12; SteREO Discovery.V8; SteREO Lumar.V12;			

The Primo Star and ToupCam Camera

4.4 LEICA TV Adapter

4.4.1 Characteristic

- Convert the LEICA trinocular microscope phototube/head/port (have standard 34.4 mm,1.35 inch inner diameter for the insertion end to phototube) to traditional C-Mount type(25.4 mm or 1 inch diameter with 32 threads per inch), T2 mount type(M42x0.75 mm metric thread) or M52 mount type(M52x0.75mm metric thread);
- With different built-in reduction lens (2.25X, 1.5X,1.2X,1X, 0.8X,0.63X, 0.5X, 0.35X) for achieving better field of view from microscope trinocular head(suitable for 2.7”, 1.8”, 4/3”, 1”, 2/3”, 1/1.8”, 1/2”, 1/2.5”, 1/3” or 1/4” inch CCD or CMOS sensor chips);
- Can be installed in UIS trinocular tube such as: specially designed for LEICA DM series biology microscopes and industrial microscopes;
- Build of material: stainless steel material;
- Telecentric optics with low light deficiency;
- Parfocal with different microscope objective lenses;
- Diffraction limited MTF;
- Aperture totally coupled with LEICA UIS microscope objective’s exit pupil;
- The profile of one end of the adapter connecting to the microscope:

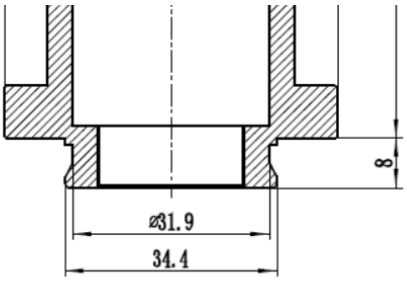

4.4.2 Specifications

Model	Photo	Magnification	Sensor Size	Mount Type
HM52 2.25X LK225XM52		2.25X	2.7”,1.8”, 4/3”, 1”	M52
HT2 1.5X LK150XT2		1.5X	1.8”, 4/3”, 1”,2/3”	T2-Mount
11541510-120 LK120XT2 HT2 1.2X(New)		1.2X	4/3”, 1”	T2 Mount

TOUPTEK PHOTONICS
WE KNOW IMAGES, WE MAKE CAMERAS

Olympus, Leica, Nikon, Zeiss Phototube to X-Mount Adapter

11541510 LK100XC HC 1.0X		1.0X	1”, 2/3”	C-Mount
11541510-080 LK080XC HC 0.80X		0.8X	1”, 2/3”	C-Mount
11541543 LK070XC HC 0.7X		0.7X	2/3”,1/1.8”,1/2”	C-Mount
11541544 LK055XC HC-0.55X		0.55X	1/1.8”,1/2”,1/2.5”	C-Mount
11541512 LK035XC HC-0.35X		0.35X	1/2.5”,1/3”,1/4”	C-Mount
Supported Microscope	Specially designed for LEICA DM series biology microscopes and industrial microscopes			

4.5 NIKON TV Adapter

4.5.1 Characteristic

- Convert the NIKON trinocular microscope phototube/head/port (have standard 38 mm, 1.50-inch inner diameter for the insertion end to phototube) to traditional C-Mount type(25.4 mm or 1 inch diameter with 32 threads per inch), T2 mount type(M42x0.75 mm metric thread) or M52 mount type(M52x0.75mm metric thread);
- With different built-in reduction lens (2.25X, 1.5X,1.2X,1X, 0.8X,0.63X, 0.5X, 0.35X) for achieving better field of view from microscope trinocular head(suitable for 2.7”, 1.8”, 4/3”, 1”, 2/3”, 1/1.8”, 1/2”, 1/2.5”, 1/3” or 1/4” inch CCD or CMOS sensor chips);
- Can be installed in UIS trinocular tube such as : NIKON E100/E200, Ni/Ci series, Eclipse LV100N, 50i/55i/80i/90i series
- Upright: Alphaphot-2, Eclipse series(requires YT-tube), Labophot-2,Optiphot-2, Optiphot 100S/150/200/300;
- Metallurgical: EPIPHOT 300/200;
- Measuring: MM-40/MM-60;
- Inverted: Diaphot 200/300, TS100-F, TE2000;
- Build of material: stainless steel material for the C-Mount end and spray-painted aluminum for the phototube end;
- Telecentric optics with low light deficiency;
- Parfocal with different microscope objective lenses;
- Diffraction limited MTF;
- Aperture totally coupled with UIS microscope objective’s exit pupil;
- The profile of one end of the adapter connecting to the microscope:

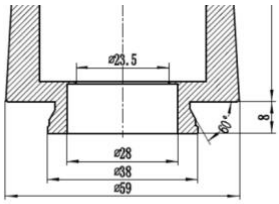

4.5.2 Specification

Model	Photo	Magnification	Sensor Size	Mount Type
NK225XM52 MBB42225		2.25X	2.7”,1.8”, 4/3”, 1”	M52
NK150XT2 MBB42150		1.5X	1.8”, 4/3”, 1”,2/3”	T2-Mount

TOUPTEK PHOTONICS
WE KNOW IMAGES, WE MAKE CAMERAS

Olympus, Leica, Nikon, Zeiss Phototube to X-Mount Adapter

MQD42120(New) NK120XT2 MBB42120		1.2X	4/3”,1”	T2-Mount
MQD42000 NK100XC MBB42000		1.0X	1”, 2/3”	C-Mount
MQD42080 NK080XC MBB42080		0.8X	1”,2/3”	C-Mount
MQD42070 NK070XC MBB42070		0.7X	2/3”,1/1.8”,1/2”	C-Mount
MQD42055 NK055XC MBB42055		0.55X	1/1.8”,1/2”,1/2.5”	C-Mount
MQD42035 NK035XC MBB42035		0.35X	1/2.5”,1/3”,1/4”	C-Mount
Supported Microscope	Can be installed in UIS trinocular microscope such as : NIKON E100/E200, Ni/Ci series, Eclipse LV100N, 50i/55i/80i/90i series Upright: Alphaphot-2, Eclipse series, Labophot-2, Optiphot-2, Optiphot 100S/150/200/300； Metallurgical: EPIPHOT 300/200; Measuring: MM-40/MM-60; Inverted: Diaphot 200/300, TS100-F, TE2000；			

TOUPTEK PHOTONICS
WE KNOW IMAGES, WE MAKE CAMERAS

4.6 HUVITZ TV Adapter

4.6.1 Characteristic

- Convert the HUVITZ trinocular microscope phototube/head/port (have standard 42 mm，1.65 inch inner diameter for the insertion end to phototube) to traditional C-Mount type(25.4 mm or 1 inch diameter with 32 threads per inch), T2 mount type(M42x0.75 mm metric thread) or M52 mount type(M52x0.75mm metric thread);
- With different built-in reduction lens (2.25X, 1.5X,1.2X,1X, 0.8X,0.63X, 0.5X, 0.35X) for achieving better field of view from microscope trinocular head(suitable for 2.7”, 1.8”, 4/3”, 1”, 2/3”, 1/1.8”, 1/2”, 1/2.5”, 1/3” or 1/4” inch CCD or CMOS sensor chips);
- Can be installed in UIS trinocular tube such as : HRM series, HSZ series microscope;
- Build of material: anodized aluminum;
- Telecentric optics with low light deficiency;
- Parfocal with different microscope objective lenses;
- Diffraction limited MTF;
- Aperture totally coupled with UIS microscope objective’s exit pupil;
- The profile of one end of the adapter connecting to the microscope:

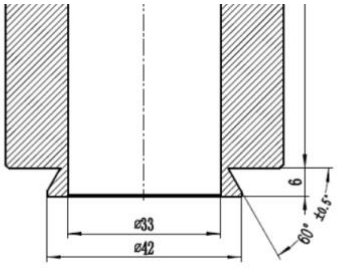

4.6.2 Specifications

Model	Photo	Magnification	Sensor Size	Mount Type
HSZ-M52P2.25X		2.25X	2.7”,1.8”, 4/3”, 1”	M52
HSZ-T2P1.5X		1.5X	1.8”, 4/3”, 1”, 2/3”	T2-Mount

TOUPTEK PHOTONICS
WE KNOW IMAGES, WE MAKE CAMERAS

Olympus, Leica, Nikon, Zeiss Phototube to X-Mount Adapter

HSZ-T2P1.2X		1.2X	4/3”,1”	T2-Mount
HSZ-CP1X		1X	1”, 2/3”	C-Mount
HSZ-CP0.80X		0.80X	1”,2/3”	C-Mount
HSZ-CP0.63X		0.63X	2/3”,1/1.8”,1/2”	C-Mount
HSZ-CP0.5X		0.5X	1/1.8”,1/2”,1/2.5”	C-Mount
HSZ-CP0.35X		0.35X	1/3”,1/4”，1/5”	C-Mount
Supported Microscope	Specially designed for HUVITZ HRM series, HSZ series microscopes			

TOUPTEK PHOTONICS
WE KNOW IMAGES, WE MAKE CAMERAS

4.7 Labomed TV Adapter

4.7.1 Characteristic

- Convert the Labomed trinocular microscope phototube/head/port (have standard 38 mm, 1.50 inch outer diameter for the insertion end to phototube) to traditional C-Mount type(25.4 mm or 1 inch diameter with 32 threads per inch);
- With different built-in reduction lens (1X, 0.63X, 0.5X, 0.35X) for achieving better field of view from microscope trinocular head(suitable for 1”, 2/3”, 1/1.8”, 1/2”, 1/2.5”, 1/3” or 1/4” inch CCD or CMOS sensor chips);
- Can be installed in UIS trinocular tube such as : LB series microscope;
- Build of material: anodized aluminum;
- Telecentric optics with low light deficiency;
- Parfocal with different microscope objective lenses;
- Diffraction limited MTF;
- Aperture totally coupled with UIS microscope objective’s exit pupil;
- The profile of one end of the adapter connecting to the microscope:

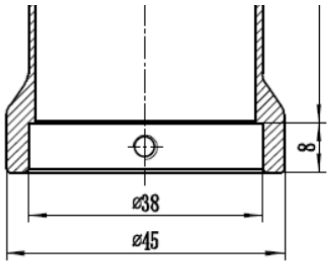

4.7.2 Specifications

Model	Photo	Magnification	Sensor Size	Mount Type
LB1.0X		1X	1”, 2/3”	C-Mount
LB0.75X		0.75X	2/3”,1/1.8”,1/2”	C-Mount
LB0.65X		0.65X	1/1.8”,1/2”,1/2.5”	C-Mount

TOUPTEK PHOTONICS
WE KNOW IMAGES, WE MAKE CAMERAS

Olympus, Leica, Nikon, Zeiss Phototube to X-Mount Adapter

LB0.50X		0.5X	1/2.3,1/2.5”,1/3”	C-Mount
LB0.35X		0.35X	1/2.5”,1/3”,1/4”	C-Mount
Supported Microscope	Specially designed for Labomed LB series microscopes			

5 Microscope 23.2 to 30, 30.5, 30.75 Eyepiece Converter

5.1 The Basic Characteristic of the Eyepiece Converter

- The Eyepiece converter can make the 23.2 mm camera Adapter to different size microscope and telescope eyepiece holder. The ToupTek's FMA and AMA end size is 23.2mm and can be directly inserted into the 23.2mm microscope eyepiece holder;
- For 23.2 eyepiece holder, no extra converter is needed for the microscope；
- The 23.2mm to 30.0mm converter is needed to connecting the 23.2mm camera Adapter to the 30 mm eyepiece holder microscope；
- The 23.2mm to 30.5mm converter is needed to connecting the 23.2mm camera Adapter to the 30.5 mm eyepiece holder microscope；
- The 23.2mm to 31.75mm converter is needed to connecting the 23.2mm camera Adapter to the 31.75 mm eyepiece holder microscope；
- For 31.75 mm eyepiece holder, user can directly use ToupTek's 31.75mm FMA and AMA for their C-mount Camera.

5.2 Specification of the Eyepiece Converter

Order Code	Picture	Model	Characteristic
108015		MET2323000	Dia.23.2mm to 30.0mm Converter
108016		MET2323050	Dia.23.2mm to 30.5mm Converter
108017		MET2323175	Dia.23.2mm to 31.75mm Converter

TOUPTEK PHOTONICS
WE KNOW IMAGES, WE MAKE CAMERAS

6 ToupTek Lens for Machine Vision

6.1 TP-1632ZL5M (16mm~32mm, 1” Format)

6.1.1 Specification

Resolution:	150lp/mm
Format :	1 "
Mount :	C
Focal Length :	16 ~ 32mm
F/No:	F1.8~F16
Iris Type :	Manual Iris
Horizontal of view :	53.2° ~ 27.5°
Distortion :	±1%
Focusing range :	∞ ~ 0.3m
Coating Range:	400nm~950nm
Filter Thread:	M62 x 0.75mm
Dimension:	₵ 66 x 113.35mm
Weight:	619g

6.1.2 Drawing and Optical Performance

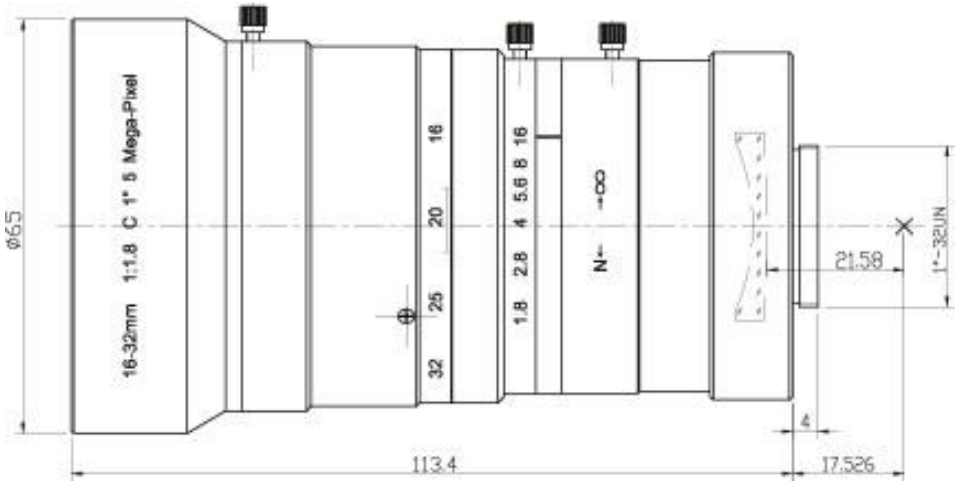

TOUPTEK PHOTONICS
WE KNOW IMAGES, WE MAKE CAMERAS

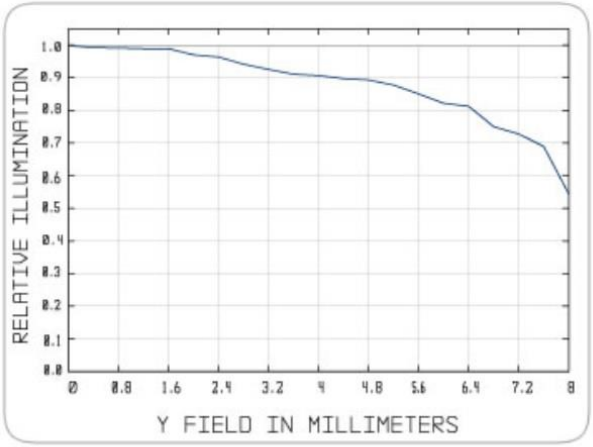

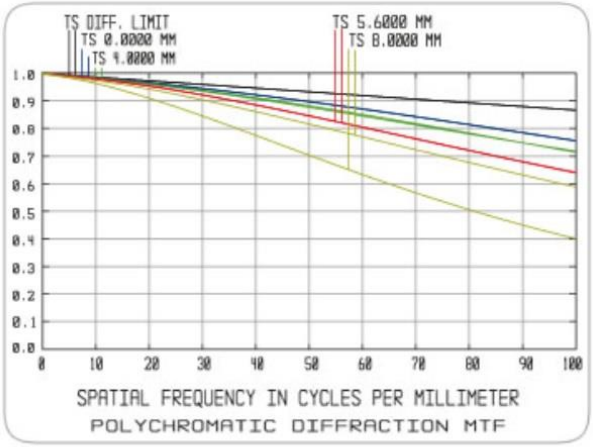

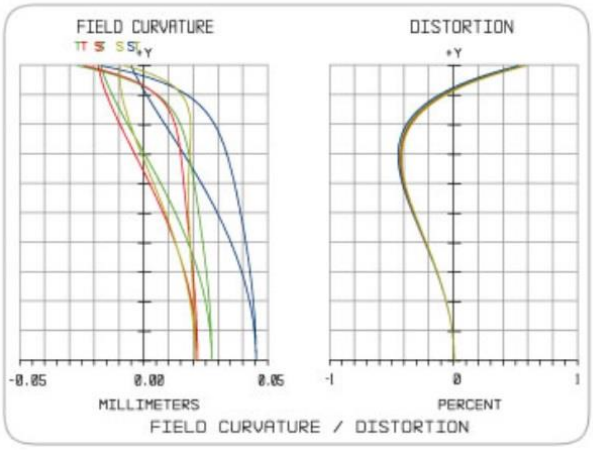

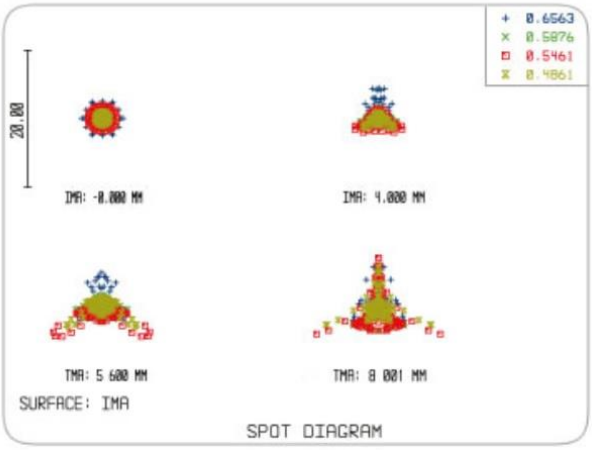

TOUPTEK PHOTONICS
WE KNOW IMAGES, WE MAKE CAMERAS

6.2 TPWA Series Lens with CS-mount

Model No.	Focal Length	Aperture	Mount	Format	FOV	Dimensions	M.O.D(m)	Weight(g)	Remarks
TPF-F02116	2.1mm	2.0	CS	1/3″	151°	Φ30*16.7mm	0.2	45	
TPF-F02516	2.5mm	2.0	CS	1/3″	140°	Φ30*19mm	0.2	45	
TPF-F02816	2.8mm	2.0	CS	1/3″	138°x104°x74°	Φ30*17.7mm	0.2	38	

6.3 TP3MP Series Lens with CS-mount

Model No.	Focal Length	Aperture	Mount	Format	FOV	Dimensions	M.O.D(m)	Weight(g)	Remarks
TPF-F02512IR3MP	2.5mm	1.2	CS	1/2.5″	115°x109°x90°	Φ28*23.6mm	0.2	32.6	全金属
TPF-F02812IR3MP	2.8mm	1.2	CS	1/2.5″	110°x104°x90°	Φ28*23.6mm	0.2	32.6	全金属
TPF-F0412IR3MP	4.0mm	1.2	CS	1/2.5″	76°	Φ28*30.0mm	0.2	44.6	全金属
TPF-F0612IR3MP	6.0mm	1.2	CS	1/2.5″	49.8°	Φ30*32.5mm	0.2	49.2	全金属
TPF-F0812IR3MP	8.0mm	1.2	CS	1/2.5″	35°	Φ30*32.5mm	0.2	49.2	全金属
TPF-F2512IR3MP	25mm	1.2	CS	1/2.5″	16.7°	Φ30*32.2mm	0.2	54	全金属

6.4 TP2MP Series Lens with CS-mount

Model No.	Focal Length	Aperture	Mount	Format	FOV	Dimensions	M.O.D(m)	Weight(g)	Remarks
TPF-F0411IR2MP	4mm	F1.2	CS	1/2.″	80°	Φ30*30.0mm	0.2	49.5	全金属
TPF-F4080HD	4mm	F1.2	CS	1/2.7″	82.6°	Φ28*31.5mm	0.2m	48	
TPF-F0611IR2MP	6mm	1.2	CS	1/2.″	54°	Φ30*30.0mm	0.2	50.5	
TPF-F6080HD	6mm	F1.2	CS	1/2.7″	54°	Φ28*31.5mm	0.2m	50.5	
TPF-F0811IR2MP	8mm	1.2	CS	1/2.″	40°	Φ30*30.0mm	0.2	48.4	全金属
TPF-F1211IR2MP	12mm	1.2	CS	1/2.″	28°5′	Φ30*30.0mm	0.2	49.5	全金属
TPF-F1611IR2MP	16mm	1.2	CS	1/2.″	23°	Φ30*30.0mm	0.2	33.0	全金属

6.5 TP1MP Series Lens with CS-mount

Model No.	Focal Length	Aperture	Mount	Format	FOV	Dimensions	M.O.D(m)	Weight(g)	Remarks
TPF-F0412IR	4.0mm	1.2	CS	1/3″	63.8°	Φ30*35mm	0.2	49.5	全金属
TPF-F0612IR	6.0mm	1.2	CS	1/3″	45.3°	Φ30*33mm	0.2	45.5	全金属
TPF-F0812IR	8.0mm	1.2	CS	1/3″	34°.12’	Φ30*34mm	0.2	48.4	全金属
TPF-F1212IR	12mm	1.2	CS	1/3″	17°42’	Φ30*32mm	0.2	33	全金属
TPF-F1612IR	16mm	1.2	CS	1/3″	17°42’	Φ30*32mm	0.2	33	全金属
TPF-F0814IR	8mm	1.4	CS	1/3″	34°42’	Φ30*26.5mm	0.2	33.5	全金属
TPF-F2514IR	25mm	1.4	CS	1/3″	13°7’	Φ30*36mm	0.2	47	全金属
TPF-F1214IR	12mm	1.4	CS	1/3″	23°30’	Φ28*25.2mm	0.2	27.6	全金属
TPF-F0414IR	4.0mm	1.4	CS	1/3″	63.8°	Φ30*30.15mm	0.2	38.5	全金属
TPF-F0614IR	6.0mm	1.4	CS	1/3″	44.5°	Φ30*32mm	0.2	36	全金属
TPF-F1614IR	16mm	1.4	CS	1/3″	17°1’	Φ30*32mm	0.3	36.5	全金属
TPF-F2514IR-C	25mm	1.4	C	1/2″	63.8°	Φ30*31mm	0.2	47	全金属

6.6 FA-A Series Machine Vision Lens (1/1.9” 6M Resolution)

6.6.1 Characteristic

- Compatible with 6M resolutions sensor
- The minimum F# is 2.8， support the maximum 1/1.9” sensor
- Super low distortion and high relative illumination
- Optimized for machine vision illumination light and sensor
- Smart structure, high seismic resistance, high and low temperature work stability
- Multilayer broadband coating ensures high transmittance and low stray light of visible and near infrared light
- Support ultra-short work distance, the different working distances are optimized to ensure the lens's optimal performance

6.6.2 Specifications (7)

Model	EFFL (mm)	F# Number	Optical Distortion	FOV			Minimum Working Distance(m)	Filter Thread	Interface
				D	H	V			
FA-A0628M-6MP	6	F2.8-F16	-1.50%	73.5°	62.8°	44.5°	0.035	~	C
FA-A0828M-6MP	8	F2.8-F16	-0.96%	58.5°	49.3°	34.0°	0.04	M27*0.5	C
FA-A1228M-6MP	12	F2.8-F16	-0.38%	41.2°	34.4°	23.4°	0.06	M27*0.5	C
FA-A1628M-6MP	16	F2.8-F16	-0.08%	31.0°	25.7°	17.5°	0.07	M27*0.5	C
FA-A2528M-6MP	25	F2.8-F16	-0.02%	19.8°	16.3°	10.9°	0.15	M25.5*0.5	C
FA-A3528M-6MP	35	F2.8-F16	-0.02%	13.8°	11.3°	7.6°	0.18	M27*0.5	C
FA-A5028M-6MP	50	F2.8-F16	0.11%	9.7°	8.0°	5.4°	0.30	M25.5*0.5	C

6.6.3 Lens Layout

6.7 FA-B Series Machine Vision lens (2/3” 6M Resolution)

6.7.1 Lens Characteristic

- Compatible with 6M resolutions sensor
- The minimum F# is 2.0， support the maximum 2/3” sensor
- Super low distortion to ensure high measurement accuracy
- Compact structure, can be integrated to compact apparatus
- High performance price ratio

6.7.2 Specifications (6)

Model	EFFL(mm)	F# Number	Optical Distortion	FOV			Minimum Working Distance(m)	Filter Thread	Interface
				D	H	V			
FA-B0824M-5MP	8	F2.4-F16	-2.06%	70.2°	58.1°	44.5°	0.03	~	C
FA-B1220M-5MP	12	F2.0-F16	-1.01%	48.8°	40.2°	30.6°	0.08	~	C
FA-B1620M-5MP	16	F2.0-F16	-0.28%	37.8°	30.8°	23.5°	0.10	M27*0.5	C
FA-B2520M-5MP	25	F2.0-F16	-0.88%	23.5°	18.8°	14.2°	0.15	M27*0.5	C
FA-B3520M-5MP	35	F2.0-F16	-0.09%	17.8°	14.3°	10.8°	0.20	M27*0.5	C
FA-B5028M-5MP	50	F2.8-F16	0.04%	12.5°	10.1°	7.5°	0.35	M27*0.5	C

6.7.3 Lens Layout

6.8 FA-C Series Machine Vision Lens(1” 10M Resolution)

6.8.1 Lens Characteristic

- Compatible with 10M resolutions sensor
- The minimum F# is 2.8， support the maximum 1” sensor
- Super low distortion and high relative illumination
- Optimized for machine vision illumination light and sensor
- Smart structure, high seismic resistance, high and low temperature work stability
- Multilayer broadband coating ensures high transmittance and low stray light of visible and near infrared light
- Support ultra-short work distance, the different working distances are optimized to ensure the lens's optimal performance

6.8.2 Specifications(5)

Model	EFFL(mm)	F# Number	Optical Distortion	FOV			Minimum Working Distance(m)	Filter Thread	Interface
				D	H	V			
FA-C1228M-12MP	12	F2.8-F16	-1.79%	70.5°	59.8°	46.2°	0.10	~	C
FA-C1628M-12MP	16	F2.8-F16	-1.30%	54.8°	44.9°	33.9°	0.08	M35.5*0.5	C
FA-C2528M-12MP	25	F2.8-F16	0.40%	36.7°	29.6°	22.1°	0.12	M35.5*0.5	C
FA-C3528M-12MP	35	F2.8-F16	-0.21%	26.7°	21.4°	15.9°	0.18	M35.5*0.5	C
FA-C5028M-12MP	50	F2.8-F16	-0.05%	18.9°	15.1°	11.2°	0.28	M35.5*0.5	C

6.8.3 Lens Layout

6.9 FA-D and FA-E Series Telecentric Lens

6.9.1 Lens Characteristic

- FA-D is compatible with 2/3” sensor， FA-E is compatible with 1/2“ sensor
- Object space telecentric design
- High resolution, high contrast and high relative illumination
- Ultra low distortion and suite for high accuracy measurement and alignment
- Standard C-mount interface

6.9.2 Specifications (18)

Model	Magnification	WD (mm)	Sensor Size	DOF (mm)	Resolution (um)	Optical Distortion	Telecentricity	F#	TTL（mm）	Max Diameter (mm)	Coaxial Illumination
FA-D-05-110	0.5	110	2/3"	2.98	12	≤0.05%	≤0.1°	9.3	120.5	35	√
FA-D-08-65	0.8	65	2/3"	1.25	8.3	≤0.10%	≤0.1°	10	89.7	26	
FA-D-08-130	0.8	130	2/3"	1.4	9.4	≤0.10%	≤0.1°	11.2	117.1	28	√
FA-D-1-65	1	65	2/3"	0.8	7.5	≤0.10%	≤0.1°	11	79.9	26	√
FA-D-1-110	1	110	2/3"	0.88	7.4	≤0.05%	≤0.1°	11	128.4	30	√
FA-D-2-65	2	65	2/3"	0.2	4.5	≤0.10%	≤0.1°	13.2	80.0	26	√
FA-D-2-110	2	110	2/3"	0.27	4.5	≤0.05%	≤0.1°	13.6	130.4	30	√
FA-D-4-110	4	110	2/3"	0.11	3.7	≤0.05%	≤0.1°	22	110.2	30	
FA-E-05-110	0.5	110	1/2"	2.9	25.4	≤0.50%	≤0.1°	18.8	46.2	16	
FA-E-05-65	0.5	65	1/2"	2	8.5	≤0.10%	≤0.1°	6.5	68.0	16	
FA-E-08-65	0.8	65	1/2"	2.9	20	≤0.10%	≤0.1°	23.9	76.0	16	√
FA-E-08-130	0.8	130	1/2"	2.9	20	≤0.10%	≤0.1°	23.5	97.1	18	√
FA-E-1-65	1	65	1/2"	1.1	10	≤0.20%	≤0.1°	14.9	80.0	16	√
FA-E-1-110	1	110	1/2"	1.5	13.2	≤0.10%	≤0.1°	19.7	109.8	18	√
FA-E-2-65	2	65	1/2"	0.33	5.6	≤0.10%	≤0.1°	16.7	80.1	16	
FA-E-2-110	2	110	1/2"	0.7	12.9	≤0.20%	≤0.1°	31.7	73.8	16	
FA-E-3-110	3	110	1/2"	0.3	7.65	≤0.10%	≤0.1°	34.2	117.1	16	√
FA-E-4-110	4	110	1/2"	0.18	6.1	≤0.10%	≤0.1°	36.3	132.5	16	√

FA-D is compatible with 2/3” sensor， FA-E is compatible with 1/2“ sensor

6.9.3 Lens Layout

7 Monocular Zoom Objective(MZO)

7.1 TZM0756 MZO

7.1.1 The Configuration of TZM0756 MZO with Five Modules

TZM0756 MZO(Monocular Zoom Objective) is an ideal choice for most applications that requires multiple magnifications or for those that prohibits continual manual refocusing. The applications of the TZM0756 MZO are: machine vision; small details inspection; industrial inspection especially electronic components; scientific research; medical industry; education industry.

The modular design of TZM0756 MZO is showed in below. The design is based on the bilateral parallel light path principle and consists of five basic modules. The five basic modules are: Middle Zoom Module, Auxiliary Lens Module, TV Lens Module, Bracket Adapter Module and Optional Module(Not show in the figure).

TZM0756 MZO can be combined with Camera Module (optional) to form a digital monocular zoom microscope.

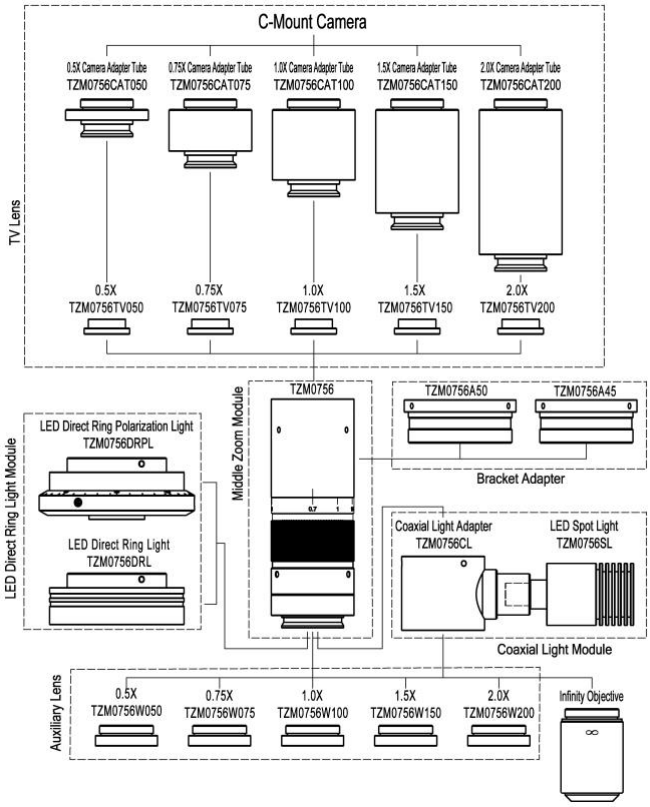

Figure 7-1 The five modules and the TZM0756 MZO

The basic module of TZM0756 MZO is TZM0756-W100-TV100-A50, it has 0.7X to 5.6X zoom range and 8X zoom ratio. It is a high-quality precision MZO that provides high resolution and large depth of field. Its main features are shown below:

- With 0.7X~5.6X zoom range
- Large optical zoom ratio: 8X
- Larger NA: 0.018-0.092 (When using 1x Auxiliary Lens)
- Higher resolution: 18.6um-3.65um (When using 1.00x Auxiliary Lens)
- Larger field of view: 1.00mm-34.28mm (Object plane)
- Larger sensor size: 2/3” (When using 1.00x TV Lens)
- Working distance range: 37.5mm-160mm
- Parfocal in zoom range
- Compatible with infinity objectives (both biological and metallographic)
- Compact size: 150 mm (length) × 40 mm (diameter)
- Auxiliary Lens with 0.50x, 0.75x, 1.00x, 1.50x and 2.00x magnification (Optional)
- TV Lens with 0.50x, 0.75x, 1.00x, 1.50x and 2.00x magnification (Optional)
- Brightness adjustable LED Direct Ring Light (Optional)
- Brightness adjustable LED Direct Ring Polarization Light (Optional)

TOUPTEK PHOTONICS
WE KNOW IMAGES, WE MAKE CAMERAS

- Brightness adjustable LED Coaxial Light (Optional)
- LED Transmissive Light (Optional)
- 45mm or 50mm Bracket Adapter (Optional)

Figure 7-2 The TZM0756 MZO with different configuration

7.1.2 TZM0756 MZO's Middle Zoom Module

Order Number	Meaning	TZM0756	Postfix meaning
TZM0756	Ordinary Middle Zoom Module	ZM: Zoom 0756: 0.7X~5.6X	NA
TZM0756T	Middle Zoom Module with back focus trimmable(adjustable) function		T: Trim
TZM0756D	Middle Zoom Module with detent to fix the magnification function		D: Detent
TZM0756TD	Middle Zoom Module with back focus trimmable and magnification detent functions		TD: Trim & Detent

7.1.3 TZM0756 MZO's Auxiliary Lens

Order number	Magnification	Working distance（mmm）	Field of View in the object side(TV050，1/3"sensor)	
			Lower magnification	Higher magnification
W050	0.5X	160	34.28mm	4.28mm
W075	0.75X	105	20.81mm	2.86mm
W100	1.00X	80	17.14mm	2.14mm
W150	1.50X	51.5	11.43mm	1.43mm
W200	2.00X	37.5	8.57mm	1.07mm

Note: The same Auxiliary Lens with different TV lens is just used to adapt to different size image sensor, which will not have much impact on the field of view of the MZO.

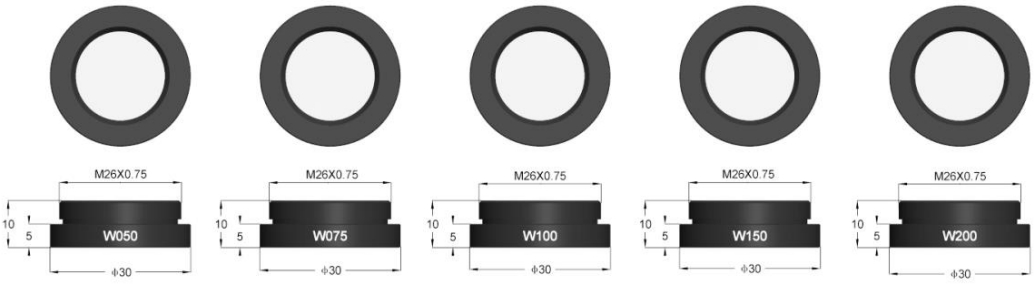

Figure 7-3 The Auxiliary Lens for TZM0756 MZO

7.1.4 TZM0756 MZO's TV Lens

Order number	The maximum compatible sensor size
TV050	1/3"
TV075	1/1.8"
TV100	2/3"
TV150	1"

TOUPTEK PHOTONICS
WE KNOW IMAGES, WE MAKE CAMERAS

TV200	4/3"

Note: Smaller image sensors can also be used for TV Lens with higher magnification, but in this way, the FOV of MZO will be reduced.

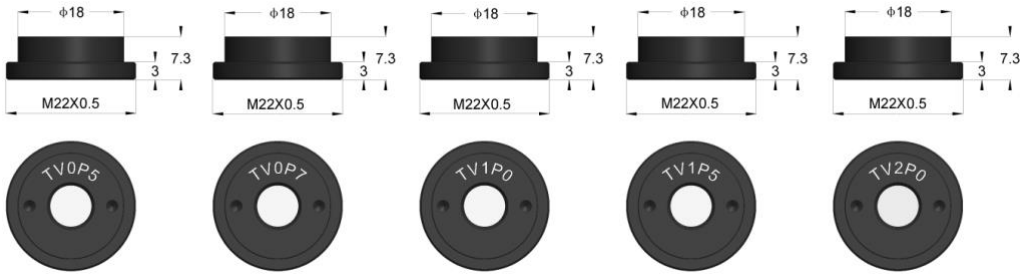

Figure 7-4 TV Lens with different magnification for TZM0756

7.1.5 TZM0756 MZO's Bracket Adapter

The installation method of the Bracket Adapter (TZM0756A45, TZM0756A50) and bracket is shown below.

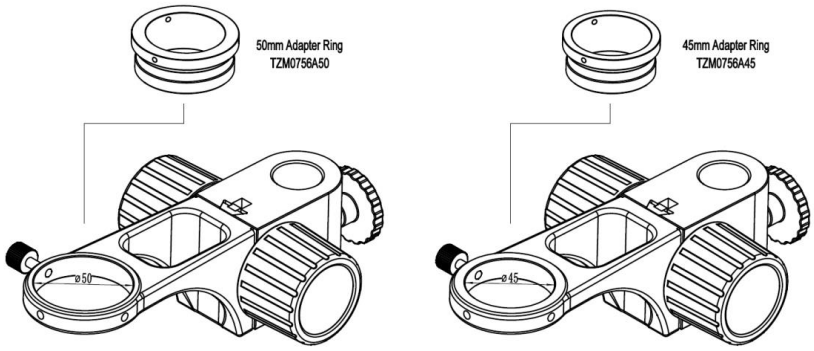

Figure 7-5 TZM0756 MZO's Bracket Adapter

7.1.6 TZM0756 MZO's Optional Module

The Optional Modules include LED Direct Ring Light Module (including LED Direct Ring Light Module and LED Direct Ring Polarization Light Module), Coaxial Light Module (composed of Coaxial Light Adapter and LED Spot Light) and Transmissive Light Module. The currently possible samples are shown in table below.

Module	Order Number	Description
LED Direct Ring Light Module	TZM0756DRL-65，TZM0756DRL-85	LED Direct Ring Light
	TZM0756DRPL-65	LED Direct Ring Polarization Light
Coaxial Light Module	TZM0756CL+TZM0756SL	Coaxial Light Adapter + LED Spot Light
Transmissive Light Module	TZM0756TL	LED Transmissive Light
Power of Light Source	40600014	US:POWER-U-12V1A(Power Adapter American Standard)
	40600015	DE: POWER-E-12V1A(Power Adapter European standard

7.1.7 The Optical Specifications of TZM0756 MZO with Different Auxiliary &TV Lens

The optical specifications of TZM0756 MZO with different Auxiliary Lens and TV Lens are shown in table below. Auxiliary Lens and TV Lens with 1.00x(TZM0756-W100-TV100) are listed in the left-up cell. Its data is the basis of the other parameters in the whole table.

Auxilary Lens	Specifications	TV Lens									
		1.0X(2/3") TV100		0.5X(1/3") TV050		0.75X(1/1.8") TV075		1.5X(1") TV150		2.0X(4/3") TV200	
		Lower	Higher	Lower	Higher	Lower	Higher	Lower	Higher	Lower	Higher
1.0X (80mm WD) WD100	PMAG	0.70X-5.60X		0.35X-2.80X		0.525X-4.20X		1.05X-8.40X		1.40X-11.20X	
	DFOV(mm)	15.71	1.96	17.14	2.14	17.02	2.13	15.24	1.9	16.07	2.01

TOUPTEK PHOTONICS
WE KNOW IMAGES, WE MAKE CAMERAS

	NAO	0.018	0.092	0.018	0.092	0.018	0.092	0.018	0.092	0.018	0.092
0.5X (160mm WD) WD050	PMAG	0.35X-2.80X		0.18X-1.40X		0.263X-2.10X		0.525X-4.20X		0.70X-5.60X	
	DFOV(mm)	31.43	3.93	34.28	4.28	33.97	4.25	30.48	3.81	32.14	4.02
	NAO	0.009	0.046	0.009	0.046	0.009	0.046	0.009	0.046	0.009	0.046
0.75X (105mm WD) WD075	PMAG	0.53X-4.20X		0.263X-2.10X		0.394X-3.15X		0.79X-6.30X		1.05X-8.40X	
	DFOV(mm)	20.99	2.61	20.81	2.86	22.67	2.84	20.25	2.54	21.43	2.68
	NAO	0.013	0.069	0.013	0.069	0.013	0.069	0.013	0.069	0.013	0.069
1.5X (51.5mm WD)WD150	PMAG	1.05X-8.40X		0.525X-4.20X		0.788X-6.30X		1.58X-12.60X		2.10X-16.80X	
	DFOV(mm)	10.46	1.31	11.43	1.43	11.34	1.42	10.13	1.27	10.71	1.34
	NAO	0.026	0.138	0.026	0.138	0.026	0.138	0.026	0.138	0.026	0.138
2.0X (37.5mm WD)WD200	PMAG	1.40X-11.20X		0.70X-5.60X		1.05X-8.40X		2.10X-16.80X		2.80X-22.40X	
	DFOV(mm)	7.9	1	8.57	1.07	8.51	1.06	7.62	0.95	8.04	1
	NA	0.035	0.182	0.035	0.182	0.035	0.182	0.035	0.182	0.035	0.182
Remarks	When using coaxial lighting, low magnification may produce vignetting. When using infinity objectives as Auxiliary Lens Module (adapter available), the PMAG、FOV and NAO of the TZM0756 depends on the parameters of the objectives.										

WD: Working Distance; PMAG: Primary Magnification; DFOV: Diagonal Field of View in the object side; NA: Numerical Aperture;

Note: Infinity corrected objectives limit system's usable zoom range due to uneven illumination. The maximum sensor size is 2/3".

7.1.8 The Dimension of TZM0756 MZO with Different Light Module

The dimension of TZM0756-W100-TV100-A50 with different light a) TZM0756 without light module; b) TZM0756 equipped with Direct Ring Light Module, c) TZM0756 equipped with Coaxial Light Module are showed below.

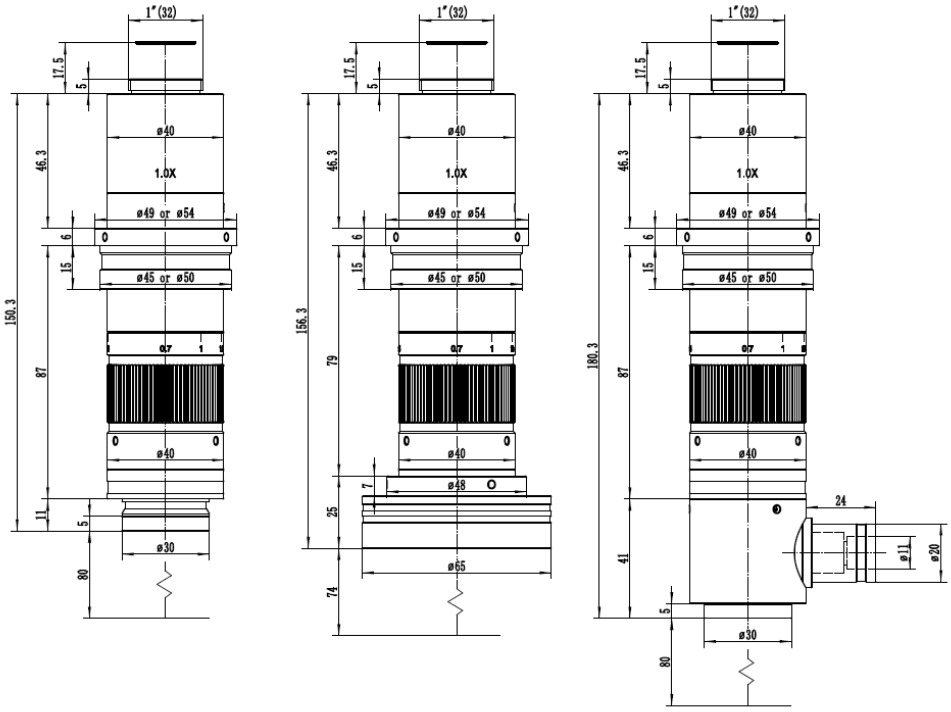

Figure 7-6 Dimensions of TZM0756-W100-TV100-A50 with different light module
a) TZM0756-W100-TV100-A50 without light module;
b) TZM0756-W100-TV100-A50 equipped with Direct Ring Light,
c) TZM0756-W100-TV100-A50 equipped with Coaxial Light)

The length of the MZO with different TV Lens will be slightly different. The length of TZM0756-W100-TV100-A50 is 150.3mm, it is much shorter than most of the MZO in the market.

TOUPTEK PHOTONICS
WE KNOW IMAGES, WE MAKE CAMERAS

7.1.9 How to Configure TZM0756 MZO

The corresponding parameters of TZM0756 MZO are listed in below. A specific combination can be determined according to the following steps.

1. Confirm the possible range of 1) DFOV and 2) Working Distance in the object space to choose the Auxiliary Lens.
2. Choose the M26x0.705 to M20x0.705 Objective Adapter, if the M20x0.705 mount infinity objective is used.
3. Confirm the camera Image Area Size, it can be 1) Sensor Size (1/x in inch), 2) Image Diagonal Length, 3) Image Width or 4) Image Height to choose the right TV Lens.
4. Choose the 45mm or 50 mm Bracket Adapter according to the diameter of the bracket hole diameter .
5. Choose the LED Direct Ring Light Module for the reflective illumination.
6. Choose the Coaxial Light Module if coaxial illumination is required.
7. Choose the Transmissive Light Module if transmissive illumination is required.
8. Choose the Camera Module.

We offer a variety of microscope cameras. Customers could get the detailed information of our cameras on the official website (http://www.touptek.com/) and choose the appropriate ones.

The combinations of different the Auxiliary Lens, The Middle Zoom Module and the TV Lens. With this figure, user can configure MZO with different magnification to fit different sensor and different application

Camera	Auxiliary Lens-Main Zoom Module-TV Lens	WD(mm)	PMAG	DFOV(mm)	NAO
1/3"	TZM0756-W050-TV050	160	0.18X-1.40X	34.28-4.28	0.009-0.046
	TZM0756-W075-TV050	105	0.26X-2.10X	20.81-2.86	0.013-0.069
	TZM0756-W100-TV050	80	0.35X-2.80X	17.14-2.14	0.018-0.092
	TZM0756-W150-TV050	52	0.53X-4.20X	11.43-1.43	0.026-0.138
	TZM0756-W200-TV050	38	0.70X-5.60X	8.57-1.07	0.035-0.182
1/1.8"	TZM0756-W050-TV075	160	0.26X-2.10X	33.97-4.25	0.009-0.046
	TZM0756-W075-TV075	105	0.40X-3.15X	22.67-2.84	0.013-0.069
	TZM0756-W100-TV075	80	0.53X-4.20X	17.02-2.13	0.018-0.092
	TZM0756-W150-TV075	52	0.79X-6.30X	11.34-1.42	0.026-0.138
	TZM0756-W200-TV075	38	1.05X-8.40X	8.51-1.06	0.035-0.182
2/3"	TZM0756-W050-TV100	160	0.35X-2.80X	31.74-3.93	0.009-0.046
	TZM0756-W075-TV100	105	0.53X-4.20X	20.99-2.61	0.013-0.069
	TZM0756-W100-TV100	80	0.70X-5.60X	15.80-1.96	0.018-0.092
	TZM0756-W150-TV100	52	1.05X-8.40X	10.46-1.31	0.026-0.138
	TZM0756-W200-TV100	38	1.40X-11.2X	7.90-0.99	0.035-0.182
1"	TZM0756-W050-TV150	160	0.53X-4.20X	30.48-3.81	0.009-0.046
	TZM0756-W075-TV150	105	0.79X-6.30X	20.25-2.54	0.013-0.069
	TZM0756-W100-TV150	80	1.05X-8.40X	15.24-1.90	0.018-0.092
	TZM0756-W150-TV150	52	1.58X-12.6X	10.13-1.27	0.026-0.138
	TZM0756-W200-TV150	38	2.10X-16.8X	7.62-0.95	0.035-0.182
4/3"	TZM0756-W050-TV200	160	0.70X-5.60X	32.14-4.02	0.009-0.046
	TZM0756-W075-TV200	105	1.05X-8.40X	21.43-2.68	0.013-0.069
	TZM0756-W100-TV200	80	1.40X-11.2X	16.07-2.01	0.018-0.092
	TZM0756-W150-TV200	52	2.10X-16.8X	10.71-1.34	0.026-0.138
	TZM0756-W200-TV200	38	2.80X-22.4X	8.04-1.00	0.035-0.182

7.1.10 TZM0756 MZO's Packing List

The packing information of the TZM0756 MZO is as follows:

Figure 7-7 The TZM0756 main body, including Auxiliary Lens Module, Middle Zoom Module, TV Lens, Camera Adapter Tube and Bracket Adapter

7.1.11 Order List of TZM0756 MZO

7.1.11.1 TZM0756 Function Module Optional Order List

Module	Order number	Quantity	Remarks	Description
Middle Zoom Module	TZM0756			Ordinary Middle Zoom Module
	TZM0756T			Middle Zoom Module with adjustable back focus
	TZM0756D			Middle Zoom Module with detent
	TZM0756TD			Middle Zoom Module with adjustable back focus and detent
Auxiliary Lens Module	W050			0.50X Object Lens
	W075			0.75X Object Lens
	W100			1.0X Object Lens
	W150			1.5X Object Lens
	W200			2.0X Object Lens
	ON-XX			Biological Objective
	ON-YY			Metallographic Objective
	Objective Adapter			M26x0.706 to M20x0.706
TV Lens	TV050			For 1/3" Sensor
	TV075			For 1/1.8" Sensor
	TV100			For 2/3" Sensor
	TV150			For 1" Sensor
	TV200			For 4/3" Sensor
Bracket Adapter	A45			45mm Bracket Adapter
	A50			50mm Bracket Adapter
Coaxial Light Module	TZM0756CL+TZM0756SL			Coaxial Light Adapter + LED Spot Light
LED Direct Ring Light Module	TZM0756DRL-65			LED Direct Ring Light
	TZM0756DRL-85			LED Direct Ring Light
	TZM0756DRPL-65			LED Direct Ring Polarization Light
Transmissive Light Module	TZM0756TL			LED Transmissive Light
Power of Light Source	40600014			POWER-U-12V1A(American Standard)
	40600015			POWER-E-12V1A(European standard)

7.1.11.2 TZM0756 Monocular Zoom Object Package Order List

Order number		Quantity	Remarks
Package Name	TZM0756□ □-W□□□-TV□□□-A□□		
	TZM0756□ □-W□□□-TV□□□-A□□		
	TZM0756□ □-W□□□-TV□□□-A□□		
	TZM0756□ □-W□□□-TV□□□-A□□		
	TZM0756□ □-W□□□-TV□□□-A□□		
	TZM0756□ □-W□□□-TV□□□-A□□		
	TZM0756□ □-W□□□-TV□□□-A□□		
	TZM0756□ □-W□□□-TV□□□-A□□		
	TZM0756□ □-W□□□-TV□□□-A□□		
	TZM0756□ □-W□□□-TV□□□-A□□		
Remarks			
Remarks：Users or salesmen can directly write the corresponding module name, number of sets, and other special requirements in the remarks with their own professional knowledge.			

7.1.11.3 TZM0756 Order List of Other Accessories

Module	Order number	Quantity	Remarks	Description
Auxiliary Lens Module	W050			0.50X Object Lens
	W075			0.75X Object Lens
	W100			1.0X Object Lens
	W150			1.5X Object Lens
	W200			2.0X Object Lens
	ON-XX			Biological Objective
	ON-YY			Metallographic Objective
	Objective Adapter			M26x0.706 to M20x0.706
TV Lens	TV050			For 1/3" Sensor
	TV075			For 1/1.8" Sensor
	TV100			For 2/3" Sensor
	TV150			For 1" Sensor
	TV200			For 4/3" Sensor
Bracket Adapter	A45			45mm Bracket Adapter
	A50			50mm Bracket Adapter
Coaxial Light Module	TZM0756CL+TZM0756SL			Coaxial Light Adapter + LED Spot Light
LED Direct Ring Light Module	TZM0756DRL-65			LED Direct Ring Light
	TZM0756DRL-85			LED Direct Ring Light
	TZM0756DRPL-65			LED Direct Ring Polarization Light
Transmissive Light Module	TZM0756TL			LED Transmissive Light
Power of Light Source	40600014			POWER-U-12V1A(MSA-C1000IC12.0-12H-US), Power Adapter American Standard
	40600015			POWER-E-12V1A(MSA-C10001C12.0-12W-DE), Power Adapter European standard

7.2 TZM0745A MZO

7.2.1 The Configuration of TZM0745A MZO with Five Modules

TZM0745A MZO(Monocular Zoom Objective) is an ideal choice for most applications that requires multiple magnifications or for those that prohibits continual manual refocusing. The applications of the TZM0745A MZO are: machine vision; small details inspection; industrial inspection especially electronic components; scientific research; medical industry; education industry.

The modular design of TZM0745A MZO is showen in below. The design is based on the bilateral parallel light path principle and consists of five basic modules. The five basic modules are: Middle Zoom Module, Auxiliary Lens Module, TV Lens Module, Bracket Adapter Module and Optional Module(Not show in the figure).

TZM0745A MZO can be combined with Camera Module (optional) to form a digital monocular zoom microscope.

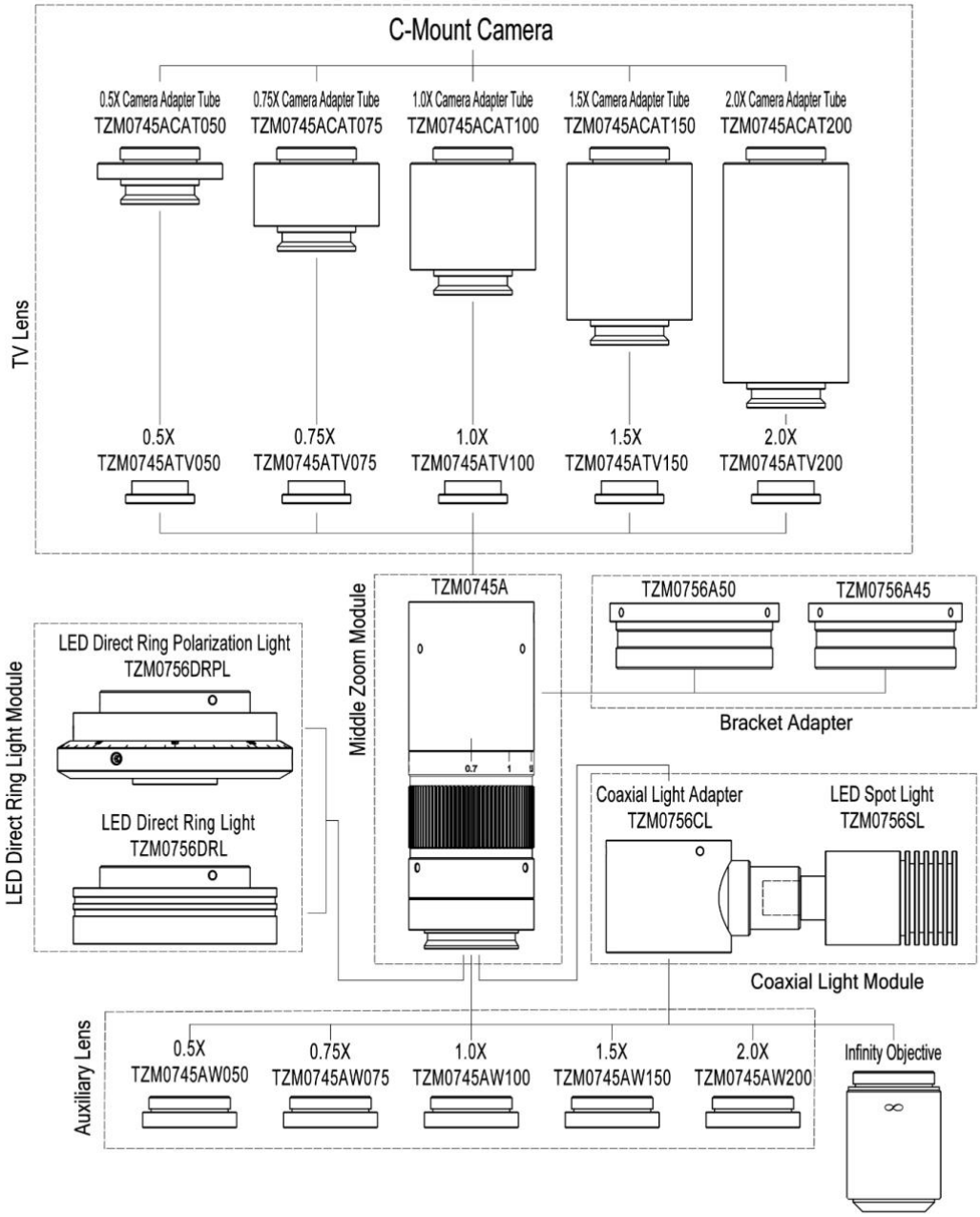

Figure 7-8 The five modules and the TZM0745A MZO

TOUPTEK PHOTONICS
WE KNOW IMAGES, WE MAKE CAMERAS

The basic module of TZM0745A MZO is TZM0745A-W100-TV100-A50, it has 0.7X to 4.5X zoom range and 6.5X zoom ratio. It is a high-quality precision MZO that provides high resolution and large depth of field. Its main features are shown below:

- With 0.7X~4.5X zoom range
- Large optical zoom ratio: 6.5X
- Larger NA: 0.018-0.078 (When using 1x Auxiliary Lens)
- Higher resolution: 18.6um-4.3um (When using 1.00x Auxiliary Lens)
- Larger field of view:1.25mm-34.28mm (Object plane)
- Larger sensor size: 2/3” (When using 1.00x TV Lens)
- Working distance range: 37.5mm-160mm
- Parfocal in zoom range
- Compatible with infinity objectives (both biological and metallographic)
- Compact size: 150 mm (length) × 40 mm (diameter)
- Auxiliary Lens with 0.50x, 0.75x, 1.00x, 1.50x and 2.00x magnification (Optional)
- TV Lens with 0.50x, 0.75x, 1.00x, 1.50x and 2.00x magnification (Optional)
- Brightness adjustable LED Direct Ring Light (Optional)
- Brightness adjustable LED Direct Ring Polarization Light (Optional)
- Brightness adjustable LED Coaxial Light (Optional)
- LED Transmissive Light (Optional)
- 45mm or 50mm Bracket Adapter (Optional)

Figure 7-9 The TZM0745A MZO with different configuration

7.2.2 TZM0745A MZO’s Middle Zoom Module

Order Number	Meaning	TZM0745A	Postfix meaning
TZM0745A	Ordinary Middle Zoom Module	ZM: Zoom 0745: 0.7X~4.5X	NA
TZM0745AT	Middle Zoom Module with back focus trimmable(adjustable) function		T: Trim
TZM0745AD	Middle Zoom Module with detent to fix the magnification function		D: Detent
TZM0745ATD	Middle Zoom Module with back focus trimmable and magnification detent functions		TD: Trim & Detent

7.2.3 TZM0745A MZO’s Auxiliary Lens

Order number	Magnification	Working distance（mmm）	Field of View in the object side(TV050，1/3"sensor)	
			Lower magnification	Higher magnification
W050	0.5X	160	34.28mm	4.28mm
W075	0.75X	105	20.81mm	2.86mm
W100	1.00X	80	17.14mm	2.14mm
W150	1.50X	51.5	11.43mm	1.43mm
W200	2.00X	37.5	8.57mm	1.07mm

Note: The same Auxiliary Lens with different TV lens is just used to adapt to different size image sensor, which will not have

much impact on the field of view of the MZO.

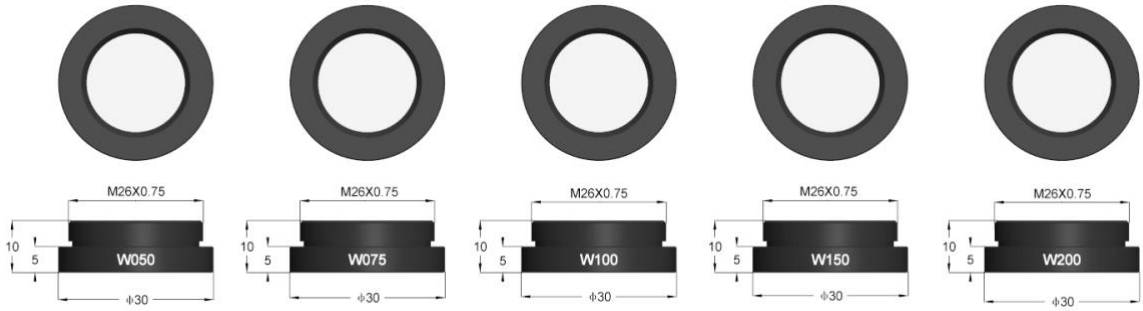

Figure 7-10 The Auxiliary Lens for TZM0745A MZO

7.2.4 TZM0745A MZO's TV Lens

Order number	The maximum compatible sensor size
TV050	1/3"
TV075	1/1.8"
TV100	2/3"
TV150	1"
TV200	4/3"

Note: Smaller image sensors can also be used for TV Lens with higher magnification, but in this way, the DFOV of MZO will be reduced.

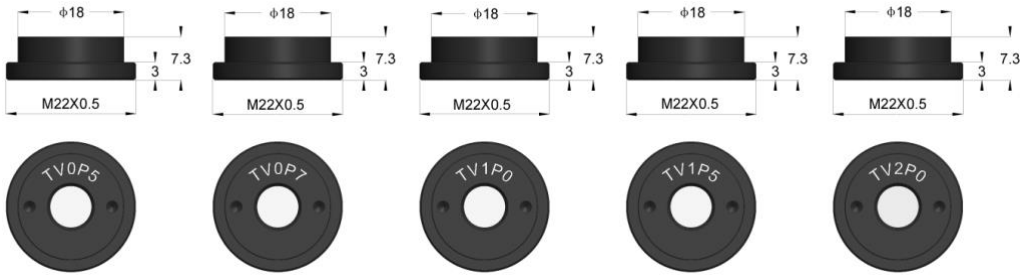

Figure 7-11 TV Lens with different magnification for TZM0745A

7.2.5 TZM0745A MZO's Bracket Adapter

The installation method of the Bracket Adapter (TZM0756A45, TZM0756A50) and bracket is shown below:

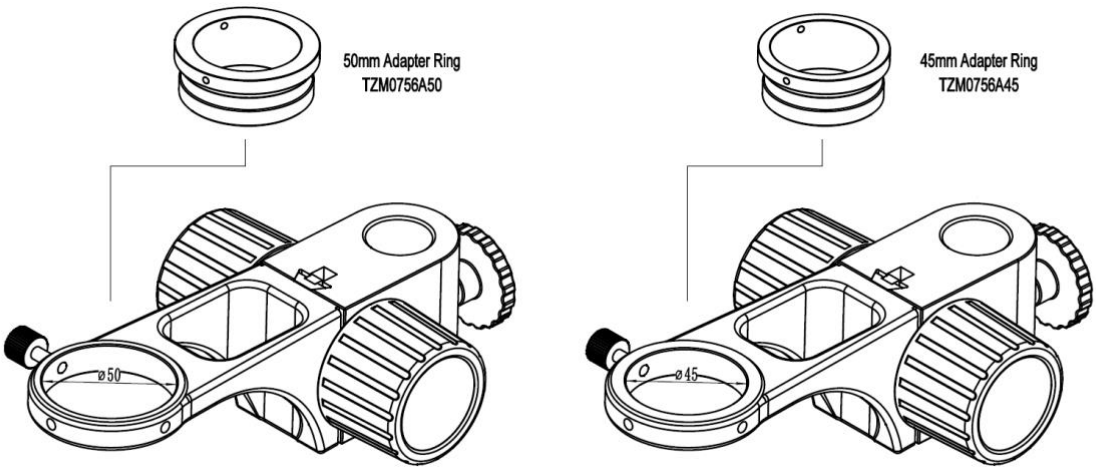

Figure 7-12 TZM0745A MZO's Bracket Adapter

TOUPTEK PHOTONICS
WE KNOW IMAGES, WE MAKE CAMERAS

7.2.6 TZM0745A MZO's The Optional Module

The Optional Modules include LED Direct Ring Light Module (including LED Direct Ring Light Module and LED Direct Ring Polarization Light Module), Coaxial Light Module (composed of Coaxial Light Adapter and LED Spot Light) and Transmissive Light Module. The currently possible samples are shown in table below.

Module	Order Number	Description
LED Direct Ring Light Module	TZM0756DRL-65，TZM0756DRL-85	LED Direct Ring Light
	TZM0756DRPL-65	LED Direct Ring Polarization Light
Coaxial Light Module	TZM0756CL+TZM0756SL	Coaxial Light Adapter + LED Spot Light
Transmissive Light Module	TZM0756TL	LED Transmissive Light
Power of Light Source	40600014	US:POWER-U-12V1A(Power Adapter American Standard)
	40600015	DE: POWER-E-12V1A(Power Adapter European standard

7.2.7 The Optical Specifications of TZM0745A MZO with Different Auxiliary &TV Lens

The optical specifications of TZM0745A MZO with different Auxiliary Lens and TV Lens are shown in table below. Auxiliary Lens and TV Lens with 1.00x (TZM0745A-W100-TV100) are listed in the left-up cell. Its data is the basis of the other parameters in the whole table.

Auxilary Lens	Specifications	TV Lens									
		1.0X(2/3") TV100		0.5X(1/3") TV050		0.75X(1/2") TV075		1.5X(1") TV150		2.0X(4/3") TV200	
		Lower	Higher	Lower	Higher	Lower	Higher	Lower	Higher	Lower	Higher
1.0X (80mm WD) WD100	PMAG	0.70X-4.5X		0.35X-2.25X		0.525X-3.38X		1.05X-6.75X		1.40X-9.00X	
	DFOV(mm)	15.71	2.44	17.14	2.67	15.24	2.37	15.24	2.37	16.07	2.5
	NAO	0.018	0.078	0.018	0.078	0.018	0.078	0.018	0.078	0.018	0.078
0.5X (160mm WD) WD050	PMAG	0.35X-2.25X		0.18X-1.13X		0.263X-1.69X		0.525X-3.38X		0.70X-4.50X	
	DFOV(mm)	31.43	4.89	34.28	5.33	30.48	4.74	30.48	4.74	32.14	5
	NAO	0.009	0.039	0.009	0.039	0.009	0.039	0.009	0.039	0.009	0.039
0.75X (105mm WD) WD075	PMAG	0.53X-3.38X		0.263X-1.69X		0.394X-2.53X		0.79X-5.06X		1.05X-6.75X	
	DFOV(mm)	20.99	3.26	20.81	3.56	20.32	3.16	20.32	3.16	21.43	3.33
	NAO	0.013	0.059	0.013	0.059	0.013	0.059	0.013	0.059	0.013	0.059
1.5X (51.5mm WD) WD150	PMAG	1.05X-6.75X		0.525X-3.38X		0.788X-5.06X		1.58X-10.13X		2.10X-13.50X	
	DFOV(mm)	10.46	1.63	11.43	1.78	10.16	1.58	10.16	1.58	10.71	1.67
	NAO	0.026	0.117	0.026	0.117	0.026	0.117	0.026	0.117	0.026	0.117
2.0X (37.5mm WD) WD200	PMAG	1.40X-9.00X		0.70X-4.5X		1.05X-6.75X		2.10X-13.50X		2.80X-18.00X	
	DFOV(mm)	7.9	1.22	8.57	1.33	7.62	1.19	7.62	1.19	8.04	1.25
	NAO	0.035	0.155	0.035	0.182	0.035	0.155	0.035	0.155	0.035	0.155
Remarks	When using coaxial lighting, low magnification may produce vignetting. When using infinity objectives as Auxiliary Lens Module (adapter available), the PMAG、FOV and NA of the TZM0745A depends on the parameters of the objectives.										

WD: Working Distance; PMAG: Primary Magnification; DFOV: Field of View in the object side; NA: Numerical Aperture;
Note: Infinity corrected objectives limit system's usable zoom range due to uneven illumination. The maximum sensor size is 2/3".

7.2.8 The Dimension of TZM0745A MZO with Different Light Module

The dimensions of TZM0745A-W100-TV100-A50 with different light a) TZM0745A without light module; b) TZM0745A equipped with Direct Ring Light Module, c) TZM0745A equipped with Coaxial Light Module are showed below.

The length of the MZO with different TV Lens will be slightly different. The length of TZM0745A-W100-TV100-A50 is 150.3mm, it is much shorter than most of the MZO in the market.

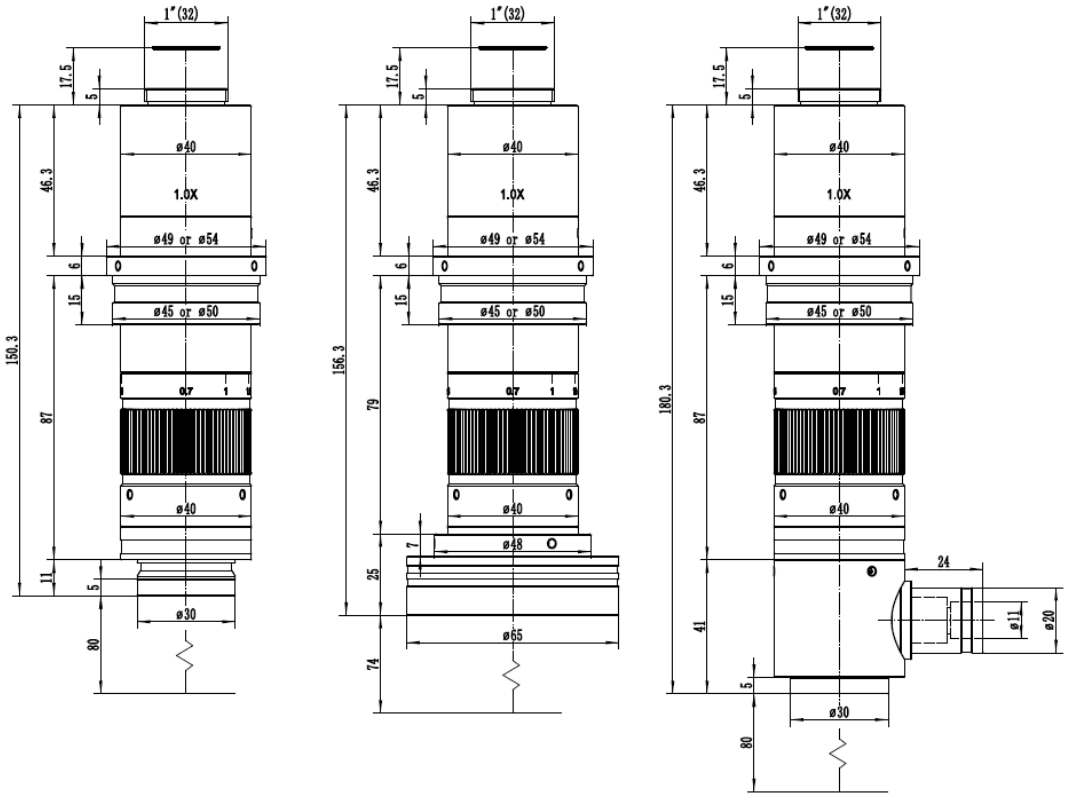

Figure 7-13 Dimensions of TZM0745A-W100-TV100-A50 with different light module
a) TZM0745A-W100-TV100-A50 without light module;
b) TZM0745A-W100-TV100-A50 equipped with Direct Ring Light Module;
c) TZM0745A-W100-TV100-A50 equipped with Coaxial Light Module.

7.2.9 How to Configure TZM0745A MZO

The corresponding parameters of TZM0745A MZO are listed below. A specific combination can be determined according to the following steps.

1. Confirm the possible range of 1) DFOV and 2) Working Distance in the object space to choose the Auxiliary Lens.
2. Choose the M26x0.705 to M20x0.705 Objective Adapter, if the M20x0.705 mount infinity objective is used.
3. Confirm the camera Image Area Size, it can be 1) Sensor Size (1/x in inch), 2) Image Diagonal Length, 3) Image Width or 4) Image Height to choose the right TV Lens.
4. Choose the 45mm or 50 mm Bracket Adapter according to the diameter of the bracket hole diameter .
5. Choose the LED Direct Ring Light Module for the reflective illumination.
6. Choose the Coaxial Light Module if coaxial illumination is required.
7. Choose the Transmissive Light Module if transmissive illumination is required.
8. Choose the Camera Module.

We offer a variety of microscope cameras.

Customers could get the detailed information of our cameras on the official website (http://www.touptek.com/) and choose the appropriate ones.

The combinations of different the Auxiliary Lens, The Middle Zoom Module and the TV Lens. With this figure, user can configure MZO with different magnification to fit different sensor and different application

Camera	Auxiliary Lens-Main Zoom Module-TV Lens	WD(mm)	PMAG	DFOV(mm)	NAO
1/3"	TZM0745A-W050-TV050	160	0.18X-1.13X	34.28-5.33	0.009-0.039
	TZM0745A-W075-TV050	105	0.26X-1.69X	22.86-3.56	0.013-0.059
	TZM0745A-W100-TV050	80	0.35X-2.25X	17.14-2.67	0.018-0.078
	TZM0745A-W150-TV050	52	0.53X-3.38X	11.43-1.78	0.026-0.117
	TZM0745A-W200-TV050	38	0.70X-4.50X	8.57-1.33	0.035-0.155
1/1.8"	TZM0745A-W050-TV075	160	0.26X-1.69X	30.48-4.74	0.009-0.039

	TZM0745A-W075-TV075	105	0.40X-2.53X	20.32-3.16	0.013-0.059
	TZM0745A-W100-TV075	80	0.53X-3.38X	15.24-2.37	0.018-0.078
	TZM0745A-W150-TV075	52	0.79X-5.06X	10.16-1.58	0.026-0.117
	TZM0745A-W200-TV075	38	1.05X-6.75X	7.62-1.19	0.035-0.155
2/3"	TZM0745A-W050-TV100	160	0.35X-2.25X	31.43-4.89	0.009-0.039
	TZM0745A-W075-TV100	105	0.53X-3.38X	20.95-3.26	0.013-0.059
	TZM0745A-W100-TV100	80	0.70X-4.5X	15.71-2.44	0.018-0.078
	TZM0745A-W150-TV100	52	1.05X-6.75X	10.46-1.63	0.026-0.117
	TZM0745A-W200-TV100	38	1.40X-9.00X	7.90-1.22	0.035-0.155
1"	TZM0745A-W050-TV150	160	0.53X-3.38X	30.48-4.74	0.009-0.039
	TZM0745A-W075-TV150	105	0.79X-5.06X	20.25-3.16	0.013-0.059
	TZM0745A-W100-TV150	80	1.05X-6.75X	15.24-2.37	0.018-0.078
	TZM0745A-W150-TV150	52	1.58X-10.13X	10.13-1.58	0.026-0.117
	TZM0745A-W200-TV150	38	2.10X-13.5X	7.62-1.19	0.035-0.155
4/3"	TZM0745A-W050-TV200	160	0.70X-4.50X	32.14-5.00	0.009-0.039
	TZM0745A-W075-TV200	105	1.05X-6.75X	21.43-3.33	0.013-0.059
	TZM0745A-W100-TV200	80	1.40X-9.00X	16.07-2.50	0.018-0.078
	TZM0745A-W150-TV200	52	2.10X-13.5X	10.71-1.67	0.026-0.117
	TZM0745A-W200-TV200	38	2.80X-18.00X	8.04-1.25	0.035-0.155

7.2.10 TZM0745A MZO Packing List

The packing information of the TZM0745A MZO is as follows:

Figure 7-14 The TZM0745A Main Body, including Auxiliary Lens Module, Middle Zoom Module, TV Lens, Camera Adapter Tube and Bracket Adapter

7.2.11 Order List of TZM0745A MZO

7.2.11.1 TZM0745A Function Module Optional Order List

Module	Order number	Quantity	Remarks	Description
Middle Zoom Module	TZM0745A			Ordinary Middle Zoom Module
	TZM0745AT			Middle Zoom Module with adjustable back focus
	TZM0745AD			Middle Zoom Module with detent
	TZM0745ATD			Middle Zoom Module with adjustable back focus and detent
Auxiliary Lens Module	W050			0.50X Object Lens
	W075			0.75X Object Lens
	W100			1.0X Object Lens

	W150			1.5X Object Lens
	W200			2.0X Object Lens
	ON-XX			Biological Objective
	ON-YY			Metallographic Objective
	Objective Adapter			M26x0.706 to M20x0.706
TV Lens	TV050			For 1/3" Sensor
	TV075			For 1/1.8" Sensor
	TV100			For 2/3" Sensor
	TV150			For 1" Sensor
	TV200			For 4/3" Sensor
Bracket Adapter	A45			45mm Bracket Adapter
	A50			50mm Bracket Adapter
Coaxial Light Module	TZM0756CL+TZM0756SL			Coaxial Light Adapter + LED Spot Light
LED Direct Ring Light Module	TZM0756DRL-65/85			LED Direct Ring Light
	TZM0756DRL-85			LED Direct Ring Light
	TZM0756DRPL-65			LED Direct Ring Polarization Light
Transmissive Light Module	TZM0756TL			LED Transmissive Light
Power of Light Source	40600014			POWER-U-12V1A(American Standard)
	40600015			POWER-E-12V1A(European standard)

7.2.11.2 TZM0745A Monocular Zoom Object Package Order List

Order number		Quantity	Remarks
Package Name	TZM0745A□ □-W□□□-TV□□□-A□□		
	TZM0745A□ □-W□□□-TV□□□-A□□		
	TZM0745A□ □-W□□□-TV□□□-A□□		
	TZM0745A□ □-W□□□-TV□□□-A□□		
	TZM0745A□ □-W□□□-TV□□□-A□□		
	TZM0745A□ □-W□□□-TV□□□-A□□		
	TZM0745A□ □-W□□□-TV□□□-A□□		
	TZM0745A□ □-W□□□-TV□□□-A□□		
	TZM0745A□ □-W□□□-TV□□□-A□□		
	TZM0745A□ □-W□□□-TV□□□-A□□		
Remarks			
Remarks：Users or salesmen can directly write the corresponding module name, number of sets, and other special requirements in the remarks with their own professional knowledge.			

7.2.11.3 TZM0745A Order List of Other Accessories

Module	Order number	Quantity	Remarks	Description
Auxiliary Lens Module	W050			0.50X Object Lens
	W075			0.75X Object Lens
	W100			1.0X Object Lens
	W150			1.5X Object Lens
	W200			2.0X Object Lens
	ON-XX			Biological Objective
	ON-YY			Metallographic Objective
	Objective Adapter			M26x0.706 to M20x0.706
TV Lens	TV050			For 1/3" Sensor
	TV075			For 1/1.8" Sensor
	TV100			For 2/3" Sensor

	TV150			For 1" Sensor
	TV200			For 4/3" Sensor
Bracket Adapter	A45			45mm Bracket Adapter
	A50			50mm Bracket Adapter
Coaxial Light Module	TZM0756CL+TZM0756SL			Coaxial Light Adapter + LED Spot Light
LED Direct Ring Light Module	TZM0756DRL-65/85			LED Direct Ring Light
	TZM0756DRL-85			LED Direct Ring Light
	TZM0756DRPL-65			LED Direct Ring Polarization Light
Transmissive Light Module	TZM0756TL			LED Transmissive Light
Power of Light Source	40600014			POWER-U-12V1A(MSA-C1000IC12.0-12H-US), Power Adapter American Standard
	40600015			POWER-E-12V1A(MSA-C10001C12.0-12W-DE), Power Adapter European standard

7.3 TZM0745B MZO

7.3.1 The Configuration of TZM0745B MZO with Five Modules

TZM0745B MZO(Monocular Zoom Objective) is an ideal choice for most applications that requires multiple magnifications or for those that prohibits continual manual refocusing. The applications of the TZM0745B MZO are: machine vision; small details inspection; industrial inspection especially electronic components; scientific research; medical industry; education industry.

The modular design of TZM0745B MZO is showen below. The design is based on the bilateral parallel light path principle and consists of five basic modules. The three basic modules are: Middle Zoom Module with preconfigured Auxiliary Lens, TV Lens, Bracket Adapter Module and Optional Module(Not show in the figure).

TZM0745B MZO can be combined with Camera Module (optional) to form a digital monocular zoom microscope.

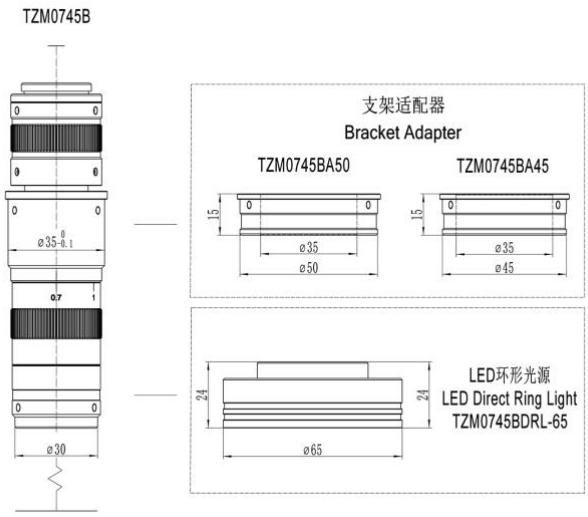

Figure 7-15 The three modules and the TZM0745B MZO

The basic module of TZM0745B MZO is TZM0745B-W2100-TV2050-A50. Its main features are shown below:

- With 0.7X~4.5X zoom range, 6.5X zoom ratio
- Larger NA: 0.02-0.07 (When using 1x Auxiliary Lens)
- Higher resolution: 17um-3.9um (When using 1.00x Auxiliary Lens)
- Larger field of view: 2.67mm-22.85mm (Object plane)
- Larger sensor size: 1/1.8” (When using 0.75x TV Lens)
- Working distance range: 95mm-127mm
- Compact size: 125 mm (length) × 38mm (diameter)
- Parfocal in zoom range
- Intensity adjustable LED Direct Ring Light (Optional)
- LED Transmissive Light (Optional)

Figure 7-16 The TZM0745B MZO with different configuration

TOUPTEK PHOTONICS
WE KNOW IMAGES, WE MAKE CAMERAS

7.3.2 TZM0745B MZO's Middle Zoom Module with Preconfigured Auxiliary Lens, TV Lens

Order Number	Magnification of main body		Magnification of system	NA	Working distance	DFOV (mm)	The maximum compatible sensor size
TZM0745B-W2100-TV2050	0.7X-4.5X		0.35X-2.25X	0.016-0.07	95mm	17.14-2.67	1/3inch
TZM0745B-W2100-TV2075	0.7X-4.5X		0.53X-3.38X	0.016-0.07	95mm	17.14-2.67	1/1.8inch
TZM0745B-W2075-TV2050	0.7X-4.5X		0.26X-1.69X	0.012-0.053	127mm	22.86-3.56	1/3inch
TZM0745B-W2075-TV2075	0.7X-4.5X		0.39X-2.53X	0.012-0.053	127mm	22.86-3.56	1/1.8inch

7.3.3 TZM0745B MZO's Auxiliary Lens

Order number	Magnification	Working distance（mmm）	Field of View in the object side(TV2050，1/3"sensor)	
			Lower magnification	Higher magnification
W2075	0.75X	127	22.86mm	3.56mm
W2100	1.00X	95	17.14mm	2.67mm

Note: The same Auxiliary Lens with different TV lens is just used to adapt to different size image sensor, which will not have much impact on the field of view of the MZO.

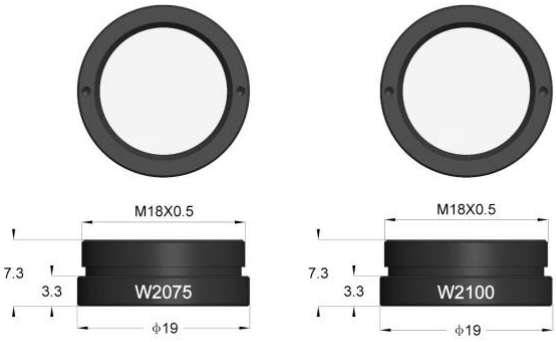

Figure 7-17 The Auxiliary Lens for TZM0745B MZO

7.3.4 TZM0745B MZO's TV Lens

The order number and optical parameters of TV Lens

Order number	The maximum compatible sensor size
TV2050	1/3"
TV2100	1/1.8"

Note: Smaller image sensors can also be used for TV Lens with higher magnification, but in this way, the DFOV of MZO will be reduced.

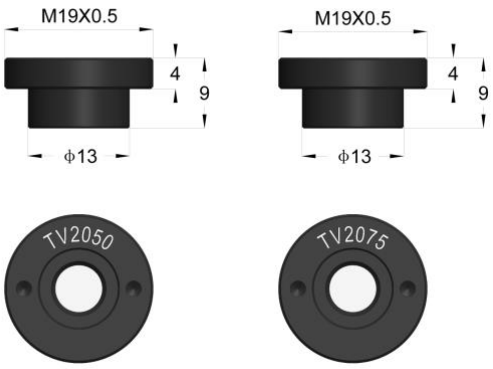

Figure 7-18 TV Lens with different magnification for TZM0745B

7.3.5 TZM0745B MZO's Bracket Adapter Module

The installation method of the Bracket Adapter (TZM0745BA45, TZM0745BA50) and bracket is shown in below

TOUPTEK PHOTONICS
WE KNOW IMAGES, WE MAKE CAMERAS

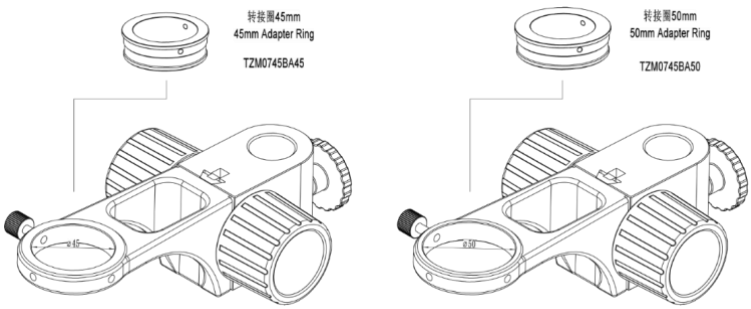

Figure 7-19 TZM0745B MZO's Bracket Adapter

7.3.6 TZM0745B MZO's Optional Module

The Optional Modules include LED Direct Ring Light Module and Transmissive Light Module. The currently possible samples are shown in table below.

Module	Order Number	Description
LED Direct Ring Light Module	TZM0745BDRL-65	LED Direct Ring Light
Transmissive Light Module	TZM0756TL	LED Transmissive Light
Power of Light Source	40600014	US:POWER-U-12V1A(Power Adapter American Standard)
	40600015	DE: POWER-E-12V1A(Power Adapter European standard

7.3.7 The Optical Specifications of TZM0745B MZO with Different Auxiliary &TV Lens

The optical specifications of TZM0745B MZO with different Auxiliary Lens and TV Lens are shown in table below.

Order Number	Magnification of main body	Magnification of system	NA	Working distance(WD)	DFOV (mm)	The maximum compatible sensor size
TZM0745B-W2100-TV2050	0.7X-4.5X	0.35X-2.25X	0.016-0.07	95mm	17.14-2.67	1/3inch
TZM0745B-W2100-TV2075	0.7X-4.5X	0.53X-3.38X	0.016-0.07	95mm	17.14-2.67	1/1.8inch
TZM0745B-W2075-TV2050	0.7X-4.5X	0.26X-1.69X	0.012-0.053	127mm	22.86-3.56	1/3inch
TZM0745B-W2075-TV2075	0.7X-4.5X	0.39X-2.53X	0.012-0.053	127mm	22.86-3.56	1/1.8inch

WD: Working Distance; DFOV: Diagonal Field of View in the object side; NA: Numerical Aperture;
Note: Infinity corrected objectives limit system's usable zoom range due to uneven illumination. The maximum sensor size is 1/1.8".

7.3.8 The Dimension of TZM0745B MZO with Auxiliary Lens and TV Lens Configuration

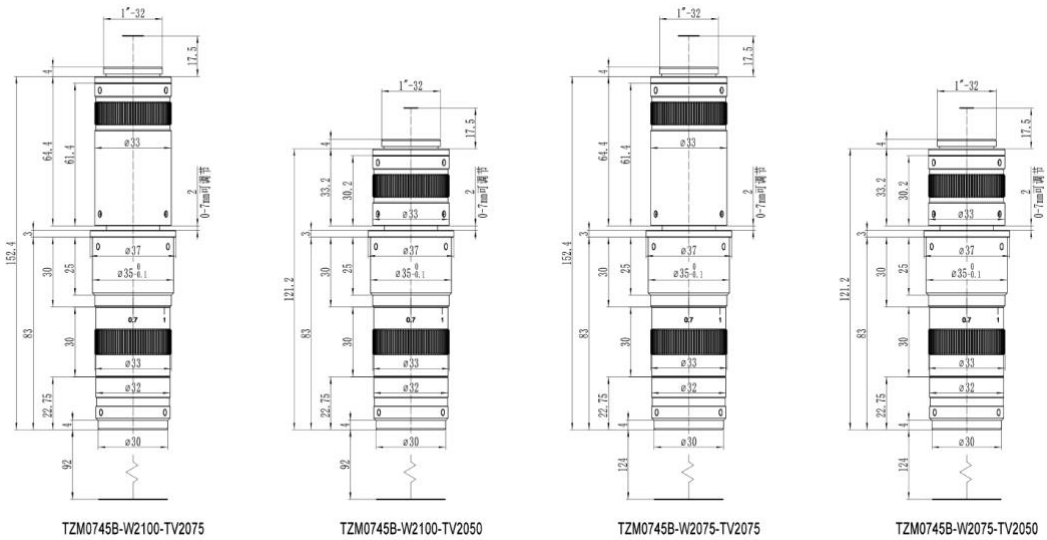

Figure 7-20 Dimensions of a)TZM0745B-W2100-TV2075; b) TZM0745B-W2100-TV2050;
c) TZM0745B-W2075-TV2075 d) TZM0745B-W2075-TV2050

The length of the MZO with different TV Lens will be slightly different. The length of TZM0745B-W2100-TV2050 is 121.22mm, it is much shorter than most of the MZO in the market.

TOUPTEK PHOTONICS
WE KNOW IMAGES, WE MAKE CAMERAS

7.3.9 TZM0745B MZO Packing List

The packing information of TZM0745B MZO is as follows with optional Bracket Adapter A45 or A50:

Figure 7-21 The TZM0745Bs main body (Can be TZM0745B-W2100-TV2050, TZM0745B-W2100-TV2075, TZM0745B-W2075-TV2050 or TZM0745B-W2075-TV2075) and Bracket Adapter

7.3.10 Order List of TZM0745B MZO

7.3.10.1 TZM0745B MZO Preconfigured Order List

Order number		Quantity	Remarks
Package Name	TZM0745B-W2100-TV2050		
	TZM0745B-W2100-TV2075		
	TZM0745B-W2075-TV2050		
	TZM0745B-W2075-TV2075		

7.3.10.2 TZM0745B Order List of Other Accessories

Module	Order number	Quantity	Remarks	Description
LED Direct Ring Light Module	TZM0745BDRL-65			LED Direct Ring Light
Transmissive Light Module	TZM0756TL			LED Transmissive Light
Power of Light Source	40600014			POWER-U-12V1A(MSA-C1000IC12.0-12H-US), Power Adapter American Standard
	40600015			POWER-E-12V1A(MSA-C10001C12.0-12W-DE), Power Adapter European Standard

7.4 TZM0480 MZO

7.4.1 The Configuration of TZM0480 MZO with Five Modules

TZM0480 MZO(Monocular Zoom Objective) is an ideal choice for most applications that requires multiple magnifications or for those that prohibits continual manual refocusing. The applications of the TZM0480 MZO are: machine vision; small details inspection; industrial inspection especially electronic components; scientific research; medical industry; education industry.

The modular design of TZM0480 MZO is showed in below. The design is based on the bilateral parallel light path principle and consists of five basic modules. The five basic modules are: Middle Zoom Module, Auxiliary Lens Module, TV Lens Module, Bracket Adapter Module and Optional Module(Not show in the figure).

TZM0480 MZO can be combined with Camera Module (optional) to form a digital monocular zoom microscope.

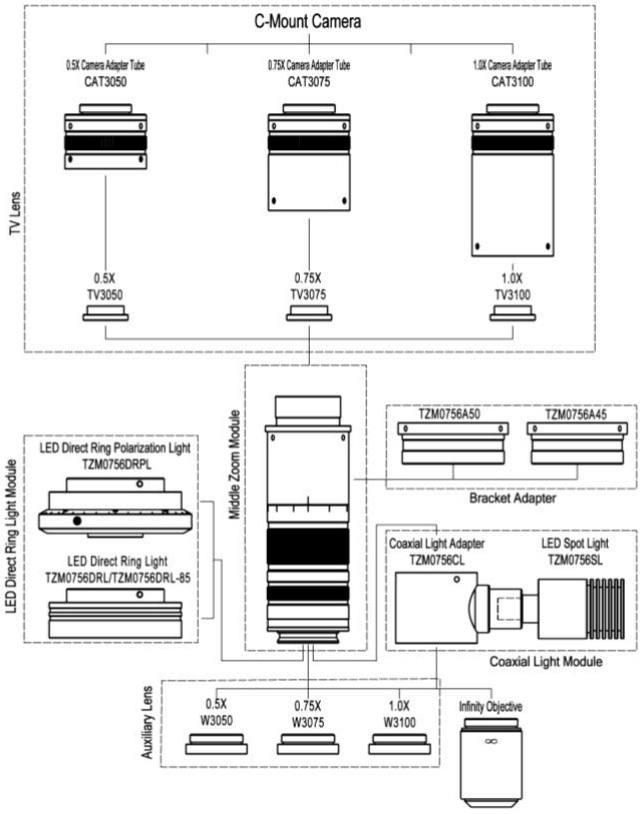

Figure 7-22 The five modules and the TZM0480 MZO

The basic module of TZM0480 MZO is TZM0480-W3100-TV3100-A50, it has 0.4X-8.0X zoom range and 20X zoom ratio. It is a high-quality precision MZO that provides high resolution and large depth of field. Its main features are shown below:

- With 0.4X~8.0X zoom range, 20X zoom ratio
- Larger NA: 0.01-0.12 (When using 1.00x Auxiliary Lens)
- Higher resolution: 27.5um-2.3um (When using 1.00x Auxiliary Lens)
- Larger field of view: 1.5mm-60mm (Object plane)
- Larger sensor size: 2/3” (When using 1.00x TV Lens)
- Working distance range: 86mm-174mm
- With adjustable BFL, parfocal in zoom range
- With adjustable center, the image center remains unchanged from 8.0x to 0.4x
- Compatible with infinity objectives (both biological and metallographic)
- Compact size: 194 mm (length) × 40 mm (diameter)
- Auxiliary Lens with 0.50x, 0.75x, 1.00x magnification (Optional)
- TV Lens with 0.50x, 0.75x, 1.00x magnification (Optional)
- Brightness adjustable LED Direct Ring Light (Optional)
- Brightness adjustable LED Direct Ring Polarization Light (Optional)
- Brightness adjustable LED Coaxial Light (Optional)
- LED Transmissive Light (Optional)
- 45mm or 50mm Bracket Adapter (Optional)

Figure 7-23 The TZM0480 MZO with different configuration

7.4.2 TZM0480 MZO's Middle Zoom Module

Order Number	Meaning	TZM0480	Postfix meaning
TZM0480	Ordinary Middle Zoom Module	ZM: Zoom 0480: 0.4X~8.0X	NA
TZM0480D	Middle Zoom Module with detent to fix the magnification function		D: Detent

7.4.3 TZM0480 MZO's Auxiliary Lens

Order number	Magnification	Working distance（mmm）	Field of View in the object side(TV3050，1/3"sensor)	
			Lower magnification	Higher magnification
W3050	0.5X	174	60.00mm	3.00mm
W3075	0.75X	115	40.00mm	2.00mm
W3100	1.00X	86	30.00mm	1.50mm

Note: The same Auxiliary Lens with different TV lens is just used to adapt to different size image sensor, which will not have much impact on the field of view of the MZO.

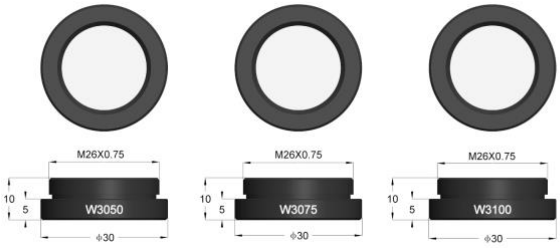

Figure 7-24 The Auxiliary Lens for TZM0480 MZO

7.4.4 TZM0480 MZO's TV Lens

Order number	The maximum compatible sensor size
TV3050	1/3"
TV3075	1/1.8"
TV3100	2/3"

Note: Smaller image sensors can also be used for TV Lens with higher magnification, but in this way, the FOV of MZO will be reduced.

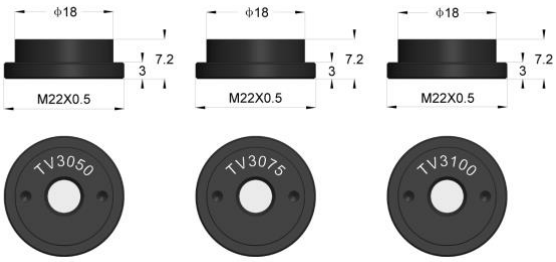

Figure 7-25 TV Lens with different magnification for TZM0480

TOUPTEK PHOTONICS
WE KNOW IMAGES, WE MAKE CAMERAS

7.4.5 TZM0480 MZO's Bracket Adapter

The installation method of the Bracket Adapter (TZM0756A45, TZM0756A50) and bracket is shown below.

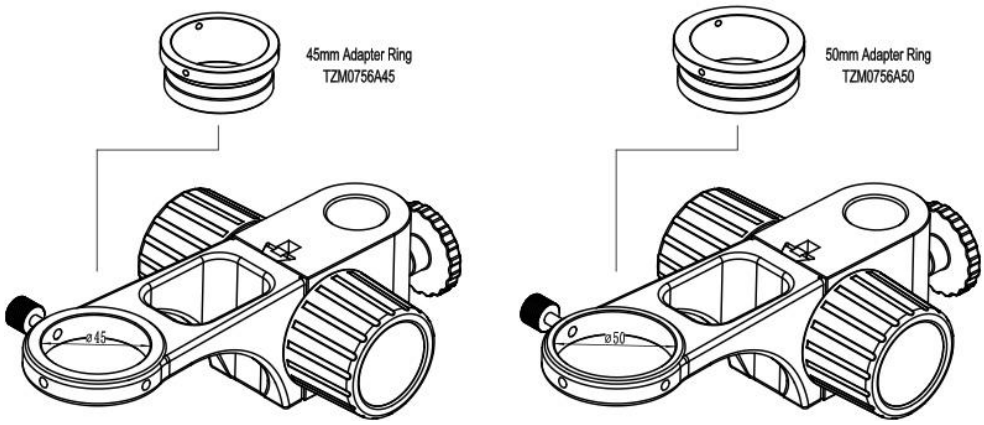

Figure 7-26 TZM0480 MZO's Bracket Adapter

7.4.6 TZM0480 MZO's Optional Module

The Optional Modules include LED Direct Ring Light Module (including LED Direct Ring Light Module and LED Direct Ring Polarization Light Module), Coaxial Light Module (composed of Coaxial Light Adapter and LED Spot Light) and Transmissive Light Module. The currently possible samples are shown in table below.

Module	Order Number	Description
LED Direct Ring Light Module	TZM0756DRL-65，TZM0756DRL-85	LED Direct Ring Light
	TZM0756DRPL-65	LED Direct Ring Polarization Light
Coaxial Light Module	TZM0756CL+TZM0756SL	Coaxial Light Adapter + LED Spot Light
Transmissive Light Module	TZM0756TL	LED Transmissive Light
Power of Light Source	40600014	US:POWER-U-12V1A(Power Adapter American Standard)
	40600015	DE: POWER-E-12V1A(Power Adapter European standard

7.4.7 The Optical Specifications of TZM0480 MZO with Different Auxiliary &TV Lens

The optical specifications of TZM0480 MZO with different Auxiliary Lens and TV Lens are shown in table below. Auxiliary Lens and TV Lens with 1.00x(TZM0480-W3100-TV3100) are listed in the left-up cell. Its data is the basis of the other parameters in the whole table.

Auxiliary Lens	Specification	TV3100 2/3"(D=11mm)		TV3050 1/3"(D=6mm)		TV3075 1/2"(D=8mm)	
W3100 WD 86mm	PMAG	0.40-8.00		0.20-4.00		0.30-6.00	
	DFOV/mm	27.50	1.38	30.00	1.50	26.67	1.33
	NA	0.010	0.112	0.010	0.112	0.010	0.112
W3050 WD 174mm	PMAG	0.20-4.00		0.10-2.00		0.15-3.00	
	DFOV/mm	55.00	2.75	60.00	3.00	53.33	2.67
	NA	0.005	0.056	0.005	0.056	0.005	0.056
W3075 WD 115mm	PMAG	0.30-6.00		0.15-3.00		0.23-4.50	
	DFOV/mm	36.67	1.83	40.00	2.00	35.56	1.78
	NA	0.008	0.084	0.008	0.084	0.008	0.084

WD: Working Distance; PMAG: Primary Magnification; DFOV: Diagonal Field of View in the object side; NA: Numerical Aperture;

Note: Infinity corrected objectives limit system's usable zoom range due to uneven illumination. The maximum sensor size is 2/3".

7.4.8 The Dimension of TZM0480 MZO with Different Light Module

The dimension of TZM0480 series MZO with different Auxiliary Lens and TV Lens is shown below:

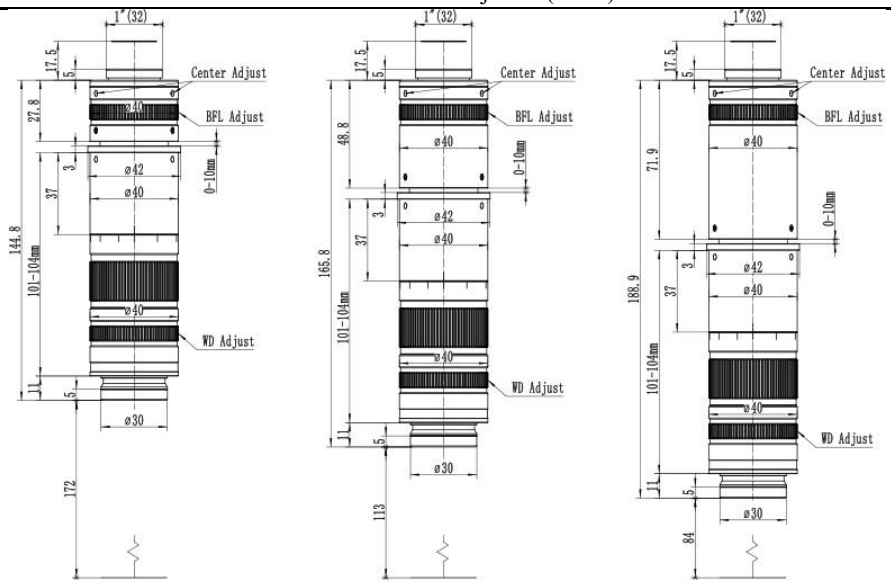

Figure 7-27 Dimension of TZM0480 series MZO with different Auxiliary Lens and TV Lens
a) TZM0480-W3050-TV3050; b) TZM0480-W3075-TV3075 c) TZM0480-W3100-TV3100

The length of the MZO with different TV Lens will be slightly different. The length of TZM0480-W3050-TV3050 is 144.8mm, it is much shorter than most of the MZO in the market.

7.4.9 How to Configure TZM0480 MZO

The corresponding parameters of TZM0480 MZO are listed in below. A specific combination can be determined according to the following steps.

1. Confirm the possible range of 1) DFOV and 2) Working Distance in the object space to choose the Auxiliary Lens.
2. Choose the M26x0.705 to M20x0.705 Objective Adapter, if the M20x0.705 mount infinity objective is used.
3. Confirm the camera Image Area Size, it can be 1) Sensor Size (1/x in inch), 2) Image Diagonal Length, 3) Image Width or 4) Image Height to choose the right TV Lens.
4. Choose the 45mm or 50 mm Bracket Adapter according to the diameter of the bracket hole diameter.
5. Choose the LED Direct Ring Light Module for the reflective illumination.
6. Choose the Coaxial Light Module if coaxial illumination is required.
7. Choose the Transmissive Light Module if transmissive illumination is required.
8. Choose the Camera Module.

We offer a variety of microscope cameras. Customers could get the detailed information of our cameras on the official website (http://www.touptek.com/) and choose the appropriate ones.

The combinations of different the Auxiliary Lens, The Middle Zoom Module and the TV Lens. With this figure, user can configure MZO with different magnification to fit different sensor and different application

Auxiliary Lens-Main Zoom Module-TV Lens	WD(mm)	PMAG	DFOV(mm)	NAO	Camera
TZM0480- W3050-TV3050	174	0.1X-2.0X	60.00-3.00	0.005-0.056	1/3inch
TZM0480- W3075-TV3050	115	0.15X-3.0X	40.00-2.00	0.008-0.084	
TZM0480- W3100-TV3050	86	0.2X-4.0X	30.00-1.50	0.010-0.112	
TZM0480- W3050-TV3075	174	0.15X-3.0X	53.33-2.67	0.005-0.056	1/2inch
TZM0480- W3075-TV3075	115	0.23X-4.5X	35.56-1.78	0.008-0.084	
TZM0480- W3100-TV3075	86	0.3X-6.0X	26.67-1.33	0.010-0.112	
TZM0480- W3050-TV3100	174	0.2X-4.0X	55.00-2.75	0.005-0.056	2/3inch
TZM0480- W3075-TV3100	115	0.3X-6.0X	36.67-1.83	0.008-0.084	
TZM0480- W3100-TV3100	86	0.4X-8.0X	27.50-1.38	0.010-0.112	

7.4.10 TZM0480 MZO's Packing List

The packing information of the TZM0480 MZO is as follows:

TOUPTEK PHOTONICS
WE KNOW IMAGES, WE MAKE CAMERAS

Figure 7-28 The TZM0480 main body, including Auxiliary Lens Module, Middle Zoom Module, TV Lens, Camera Adapter Tube and Bracket Adapter

7.4.11 Order List of TZM0480 MZO

7.4.11.1 TZM0480 Function Module Optional Order List

Module	Order number	Quantity	Remarks	Description
Middle Zoom Module	TZM0480			Ordinary Middle Zoom Module
	TZM0480D			Middle Zoom Module with detent
Auxiliary Lens Module	W3050			0.50X Object Lens
	W3075			0.75X Object Lens
	W3100			1.0X Object Lens
	ON-XX			Biological Objective
	ON-YY			Metallographic Objective
	Objective Adapter			M26x0.706 to M20x0.706
TV Lens	TV3050			For 1/3" Sensor
	TV3075			For 1/1.8" Sensor
	TV3100			For 2/3" Sensor
Bracket Adapter	A45			45mm Bracket Adapter
	A50			50mm Bracket Adapter
Coaxial Light Module	TZM0756CL+TZM0756SL			Coaxial Light Adapter + LED Spot Light
LED Direct Ring Light Module	TZM0756DRL-65			LED Direct Ring Light
	TZM0756DRL-85			LED Direct Ring Light
	TZM0756DRPL			LED Direct Ring Polarization Light
Transmissive Light Module	TZM0756TL			LED Transmissive Light
Power of Light Source	40600014			POWER-U-12V1A(American Standard)
	40600015			POWER-E-12V1A(European standard)

7.4.11.2 TZM0480 Monocular Zoom Object Package Order List

Order number		Quantity	Remarks
Package Name	TZM0480□-W3□□□-TV3□□□-A□□		
	TZM0480□-W3□□□-TV3□□□-A□□		
	TZM0480□-W3□□□-TV3□□□-A□□		
	TZM0480□-W3□□□-TV3□□□-A□□		
	TZM0480□-W3□□□-TV3□□□-A□□		
	TZM0480□-W3□□□-TV3□□□-A□□		
	TZM0480□-W3□□□-TV3□□□-A□□		
	TZM0480□-W3□□□-TV3□□□-A□□		
	TZM0480□-W3□□□-TV3□□□-A□□		
	TZM0480□-W3□□□-TV3□□□-A□□		

TOUPTEK PHOTONICS
WE KNOW IMAGES, WE MAKE CAMERAS

Remarks
Remarks：Users or salesmen can directly write the corresponding module name, number of sets, and other special requirements in the remarks with their own professional knowledge.

7.4.11.3 TZM0480 Order List of Other Accessories

Module	Order number	Quantity	Remarks	Description
Auxiliary Lens Module	W3050			0.50X Object Lens
	W3075			0.75X Object Lens
	W3100			1.0X Object Lens
	ON-XX			Biological Objective
	ON-YY			Metallographic Objective
	Objective Adapter			M26x0.706 to M20x0.706
TV Lens	TV3050			For 1/3" Sensor
	TV3075			For 1/1.8" Sensor
	TV3100			For 2/3" Sensor
Bracket Adapter	A45			45mm Bracket Adapter
	A50			50mm Bracket Adapter
Coaxial Light Module	TZM0756CL+TZM0756SL			Coaxial Light Adapter + LED Spot Light
LED Direct Ring Light Module	TZM0756DRL-65			LED Direct Ring Light
	TZM0756DRL-85			LED Direct Ring Light
	TZM0756DRPL-65			LED Direct Ring Polarization Light
Transmissive Light Module	TZM0756TL			LED Transmissive Light
Power of Light Source	40600014			POWER-U-12V1A(MSA-C1000IC12.0-12H-US), Power Adapter American Standard
	40600015			POWER-E-12V1A(MSA-C10001C12.0-12W-DE), Power Adapter European standard

TOUPTEK PHOTONICS
WE KNOW IMAGES, WE MAKE CAMERAS

7.5 TZM0460 MZO

7.5.1 The Configuration of TZM0460 MZO with Five Modules

TZM0460 MZO(Monocular Zoom Objective) is an ideal choice for most applications that requires multiple magnifications or for those that prohibits continual manual refocusing. The applications of the TZM0460 MZO are: machine vision; small details inspection; industrial inspection especially electronic components; scientific research; medical industry; education industry.

The modular design of TZM0460 MZO is showed in below. The design is based on the bilateral parallel light path principle and consists of five basic modules. The five basic modules are: Middle Zoom Module, Auxiliary Lens Module, TV Lens Module, Bracket Adapter Module and Optional Module(Not show in the figure).

TZM0460 MZO can be combined with Camera Module (optional) to form a digital monocular zoom microscope.

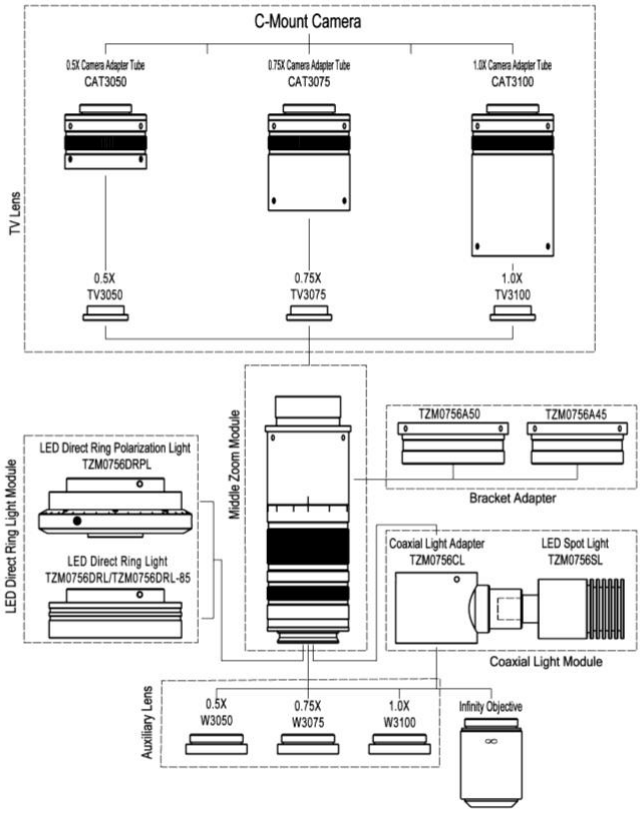

Figure 7-29 The five modules and the TZM0460 MZO

The basic module of TZM0460 MZO is TZM0460-W3100-TV3100-A50, it has 0.4X-6.0X zoom range and 15X zoom ratio. It is a high-quality precision MZO that provides high resolution and large depth of field. Its main features are shown below:

- With 0.4X~6.0X zoom range, 15X zoom ratio
- Larger NA: 0.01-0.09 (When using 1.00x Auxiliary Lens)
- Higher resolution: 27.5um-3.1um (When using 1.00x Auxiliary Lens)
- Larger field of view: 1.78mm-60mm (Object plane)
- Larger sensor size: 2/3” (When using 1.00x TV Lens)
- Working distance range: 86mm-174mm
- With adjustable BFL, parfocal in zoom range
- With adjustable center, the image center remains unchanged from 6.0x to 0.4x
- Compatible with infinity objectives (both biological and metallographic)
- Compact size: 194 mm (length) × 40 mm (diameter)
- Auxiliary Lens with 0.50x, 0.75x, 1.00x magnification (Optional)
- TV Lens with 0.50x, 0.75x, 1.00x magnification (Optional)
- Brightness adjustable LED Direct Ring Light (Optional)
- Brightness adjustable LED Direct Ring Polarization Light (Optional)
- Brightness adjustable LED Coaxial Light (Optional)
- LED Transmissive Light (Optional)
- 45mm or 50mm Bracket Adapter (Optional)

TOUPTEK PHOTONICS
WE KNOW IMAGES, WE MAKE CAMERAS

Figure 7-30 The TZM0460 MZO with different configuration

7.5.2 TZM0460 MZO's Middle Zoom Module

Order Number	Meaning	TZM0460	Postfix meaning
TZM0460	Ordinary Middle Zoom Module	ZM: Zoom 0460: 0.4X~6.0X	NA
TZM0460D	Middle Zoom Module with detent to fix the magnification function		D: Detent

7.5.3 TZM0460 MZO's Auxiliary Lens

Order number	Magnification	Working distance（mmm）	Field of View in the object side(TV3050，1/3"sensor)	
			Lower magnification	Higher magnification
W3050	0.5X	174	60.00mm	3.00mm
W3075	0.75X	115	40.00mm	2.00mm
W3100	1.00X	86	30.00mm	1.50mm

Note: The same Auxiliary Lens with different TV lens is just used to adapt to different size image sensor, which will not have much impact on the field of view of the MZO.

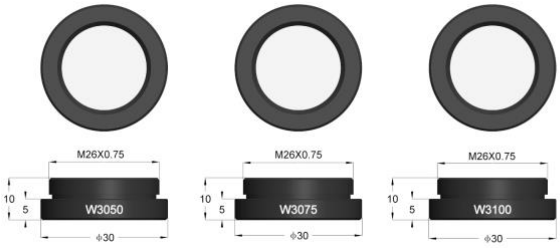

Figure 7-31 The Auxiliary Lens for TZM0460 MZO

7.5.4 TZM0460 MZO's TV Lens

Order number	The maximum compatible sensor size
TV3050	1/3"
TV3075	1/1.8"
TV3100	2/3"

Note: Smaller image sensors can also be used for TV Lens with higher magnification, but in this way, the FOV of MZO will be reduced.

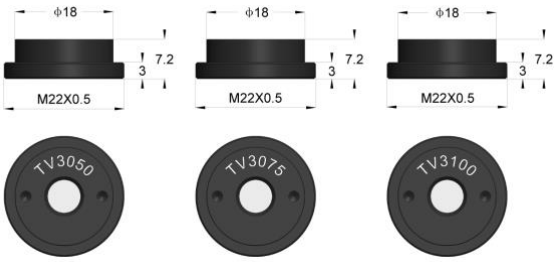

Figure 7-32 TV Lens with different magnification for TZM0460

TOUPTEK PHOTONICS
WE KNOW IMAGES, WE MAKE CAMERAS

7.5.5 TZM0460 MZO's Bracket Adapter

The installation method of the Bracket Adapter (TZM0756A45, TZM0756A50) and bracket is shown below.

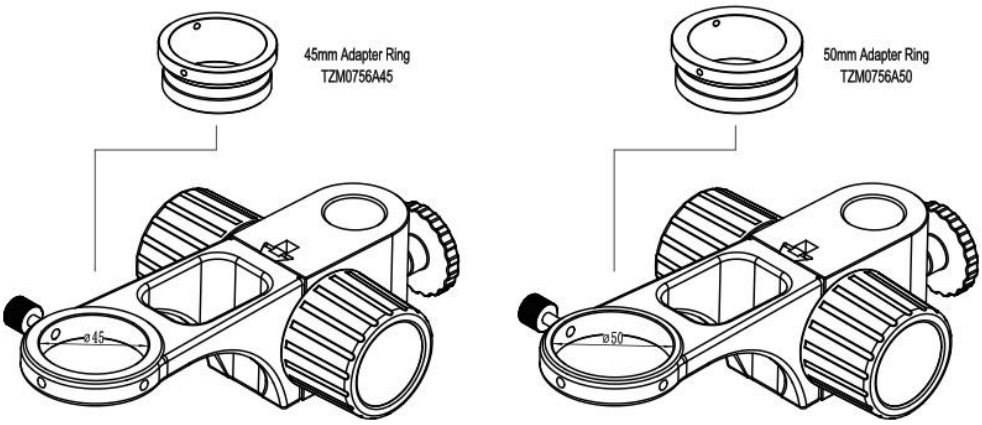

Figure 7-33 TZM0460 MZO's Bracket Adapter

7.5.6 TZM0460 MZO's Optional Module

The Optional Modules include LED Direct Ring Light Module (including LED Direct Ring Light Module and LED Direct Ring Polarization Light Module), Coaxial Light Module (composed of Coaxial Light Adapter and LED Spot Light) and Transmissive Light Module. The currently possible samples are shown in table below.

Module	Order Number	Description
LED Direct Ring Light Module	TZM0756DRL-65，TZM0756DRL-85	LED Direct Ring Light
	TZM0756DRPL-65	LED Direct Ring Polarization Light
Coaxial Light Module	TZM0756CL+TZM0756SL	Coaxial Light Adapter + LED Spot Light
Transmissive Light Module	TZM0756TL	LED Transmissive Light
Power of Light Source	40600014	US:POWER-U-12V1A(Power Adapter American Standard)
	40600015	DE: POWER-E-12V1A(Power Adapter European standard

7.5.7 The Optical Specifications of TZM0460 MZO with Different Auxiliary &TV Lens

The optical specifications of TZM0460 MZO with different Auxiliary Lens and TV Lens are shown in table below. Auxiliary Lens and TV Lens with 1.00x(TZM0460-W3100-TV3100) are listed in the left-up cell. Its data is the basis of the other parameters in the whole table.

Auxiliary Lens	Specification	TV3100 2/3"(D=11mm)		TV3050 1/3"(D=6mm)		TV3075 1/2"(D=8mm)	
W3100 WD 86mm	PMAG	0.40-6.00		0.20-3.00		0.30-4.50	
	DFOV/mm	27.50	1.83	1.83	1.83	26.67	1.78
	NA	0.010	0.090	0.090	0.090	0.010	0.090
W3050 WD 174mm	PMAG	0.20-3.00		0.10-1.50		0.15-2.25	
	DFOV/mm	55.00	3.67	3.67	3.67	53.33	3.56
	NA	0.005	0.045	0.045	0.045	0.005	0.045
W3075 WD 115mm	PMAG	0.30-4.50		0.15-2.25		0.23-3.38	
	DFOV/mm	36.67	2.44	2.44	2.44	35.56	2.37
	NA	0.008	0.068	0.068	0.068	0.008	0.068

WD: Working Distance; PMAG: Primary Magnification; DFOV: Diagonal Field of View in the object side; NA: Numerical Aperture;

Note: Infinity corrected objectives limit system's usable zoom range due to uneven illumination. The maximum sensor size is 2/3".

7.5.8 The Dimension of TZM0460 MZO with Different Light Module

The dimension of TZM0460 series MZO with different Auxiliary Lens and TV Lens is shown below:

TOUPTEK PHOTONICS
WE KNOW IMAGES, WE MAKE CAMERAS

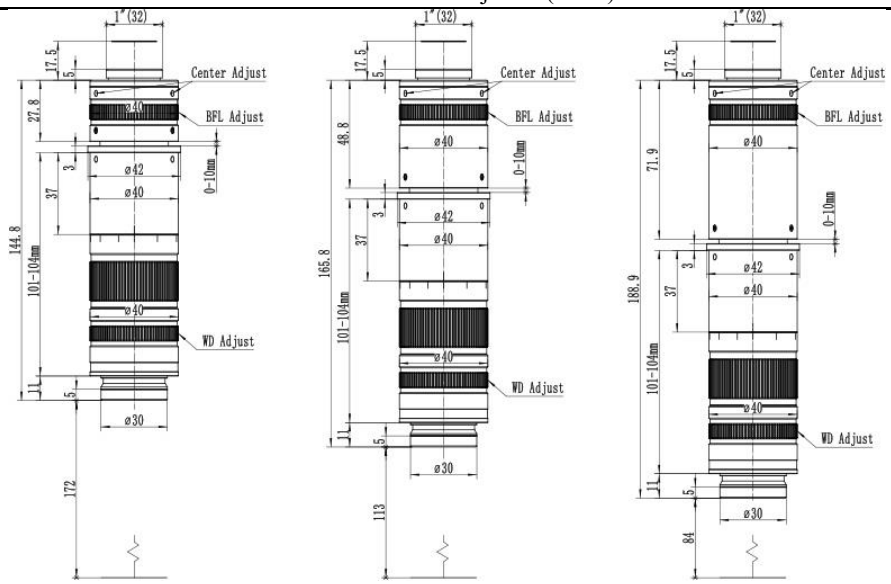

Figure 7-34 Dimension of TZM0460 series MZO with different Auxiliary Lens and TV Lens
a) TZM0460-W3050-TV3050; b) TZM0460-W3075-TV3075 c) TZM0460-W3100-TV3100

The length of the MZO with different TV Lens will be slightly different. The length of TZM0460-W3050-TV3050 is 144.8mm, it is much shorter than most of the MZO in the market.

7.5.9 How to Configure TZM0460 MZO

The corresponding parameters of TZM0460 MZO are listed in below. A specific combination can be determined according to the following steps.

1. Confirm the possible range of 1) DFOV and 2) Working Distance in the object space to choose the Auxiliary Lens.
2. Choose the M26x0.705 to M20x0.705 Objective Adapter, if the M20x0.705 mount infinity objective is used.
3. Confirm the camera Image Area Size, it can be 1) Sensor Size (1/x in inch), 2) Image Diagonal Length, 3) Image Width or 4) Image Height to choose the right TV Lens.
4. Choose the 45mm or 50 mm Bracket Adapter according to the diameter of the bracket hole diameter.
5. Choose the LED Direct Ring Light Module for the reflective illumination.
6. Choose the Coaxial Light Module if coaxial illumination is required.
7. Choose the Transmissive Light Module if transmissive illumination is required.
8. Choose the Camera Module.

We offer a variety of microscope cameras. Customers could get the detailed information of our cameras on the official website (http://www.touptek.com/) and choose the appropriate ones.

The combinations of different the Auxiliary Lens, The Middle Zoom Module and the TV Lens. With this figure, user can configure MZO with different magnification to fit different sensor and different application

Auxiliary Lens-Main Zoom Module-TV Lens	WD(mm)	PMAG	DFOV(mm)	NAO	Camera
TZM0460-W3050-TV3050	174	0.1X-1.5X	60.00-4.00	0.005-0.045	1/3inch
TZM0460-W3075-TV3050	115	0.15X-2.25X	40.00-2.67	0.008-0.068	
TZM0460-W3100-TV3050	86	0.2X-3.0X	30.00-2.00	0.010-0.090	
TZM0460-W3050-TV3075	174	0.15X-2.25X	53.33-3.56	0.005-0.045	1/2inch
TZM0460-W3075-TV3075	115	0.23X-3.38X	35.56-2.37	0.008-0.068	
TZM0460-W3100-TV3075	86	0.3X-4.50X	26.67-1.78	0.010-0.090	
TZM0460-W3050-TV3100	174	0.2X-3.0X	55.00-3.67	0.005-0.045	2/3inch
TZM0460-W3075-TV3100	115	0.3X-4.5X	36.67-2.44	0.008-0.068	
TZM0460-W3100-TV3100	86	0.4X-6.0X	27.50-1.83	0.010-0.090	

7.5.10 TZM0460 MZO's Packing List

The packing information of the TZM0460 MZO is as follows:

Figure 7-35 The TZM0460 main body, including Auxiliary Lens Module, Middle Zoom Module, TV Lens, Camera Adapter Tube and Bracket Adapter

7.5.11 Order List of TZM0460 MZO

7.5.11.1 TZM0460 Function Module Optional Order List

Module	Order number	Quantity	Remarks	Description
Middle Zoom Module	TZM0460			Ordinary Middle Zoom Module
	TZM0460D			Middle Zoom Module with detent
Auxiliary Lens Module	W3050			0.50X Object Lens
	W3075			0.75X Object Lens
	W3100			1.0X Object Lens
	ON-XX			Biological Objective
	ON-YY			Metallographic Objective
	Objective Adapter			M26x0.706 to M20x0.706
TV Lens	TV3050			For 1/3" Sensor
	TV3075			For 1/1.8" Sensor
	TV3100			For 2/3" Sensor
Bracket Adapter	A45			45mm Bracket Adapter
	A50			50mm Bracket Adapter
Coaxial Light Module	TZM0756CL+TZM0756SL			Coaxial Light Adapter + LED Spot Light
LED Direct Ring Light Module	TZM0756DRL-65			LED Direct Ring Light
	TZM0756DRL-85			LED Direct Ring Light
	TZM0756DRPL			LED Direct Ring Polarization Light
Transmissive Light Module	TZM0756TL			LED Transmissive Light
Power of Light Source	40600014			POWER-U-12V1A(American Standard)
	40600015			POWER-E-12V1A(European standard)

7.5.11.2 TZM0460 Monocular Zoom Object Package Order List

Order number		Quantity	Remarks
Package Name	TZM0460□-W3□□□-TV3□□□-A□□		
	TZM0460□-W3□□□-TV3□□□-A□□		
	TZM0460□-W3□□□-TV3□□□-A□□		
	TZM0460□-W3□□□-TV3□□□-A□□		
	TZM0460□-W3□□□-TV3□□□-A□□		
	TZM0460□-W3□□□-TV3□□□-A□□		
	TZM0460□-W3□□□-TV3□□□-A□□		
	TZM0460□-W3□□□-TV3□□□-A□□		
	TZM0460□-W3□□□-TV3□□□-A□□		
	TZM0460□-W3□□□-TV3□□□-A□□		

TOUPTEK PHOTONICS
WE KNOW IMAGES, WE MAKE CAMERAS

Remarks
Remarks：Users or salesmen can directly write the corresponding module name, number of sets, and other special requirements in the remarks with their own professional knowledge.

7.5.11.3 TZM0460 Order List of Other Accessories

Module	Order number	Quantity	Remarks	Description
Auxiliary Lens Module	W3050			0.50X Object Lens
	W3075			0.75X Object Lens
	W3100			1.0X Object Lens
	ON-XX			Biological Objective
	ON-YY			Metallographic Objective
	Objective Adapter			M26x0.706 to M20x0.706
TV Lens	TV3050			For 1/3" Sensor
	TV3075			For 1/1.8" Sensor
	TV3100			For 2/3" Sensor
Bracket Adapter	A45			45mm Bracket Adapter
	A50			50mm Bracket Adapter
Coaxial Light Module	TZM0756CL+TZM0756SL			Coaxial Light Adapter + LED Spot Light
LED Direct Ring Light Module	TZM0756DRL-65			LED Direct Ring Light
	TZM0756DRL-85			LED Direct Ring Light
	TZM0756DRPL-65			LED Direct Ring Polarization Light
Transmissive Light Module	TZM0756TL			LED Transmissive Light
Power of Light Source	40600014			POWER-U-12V1A(MSA-C1000IC12.0-12H-US), Power Adapter American Standard
	40600015			POWER-E-12V1A(MSA-C10001C12.0-12W-DE), Power Adapter European standard

TOUPTEK PHOTONICS
WE KNOW IMAGES, WE MAKE CAMERAS

7.6 TZM0440 MZO

7.6.1 The Configuration of TZM0440 MZO with Five Modules

TZM0440 MZO(Monocular Zoom Objective) is an ideal choice for most applications that requires multiple magnifications or for those that prohibits continual manual refocusing. The applications of the TZM0440 MZO are: machine vision; small details inspection; industrial inspection especially electronic components; scientific research; medical industry; education industry.

The modular design of TZM0440 MZO is showed in below. The design is based on the bilateral parallel light path principle and consists of five basic modules. The five basic modules are: Middle Zoom Module, Auxiliary Lens Module, TV Lens Module, Bracket Adapter Module and Optional Module(Not show in the figure).

TZM0440 MZO can be combined with Camera Module (optional) to form a digital monocular zoom microscope.

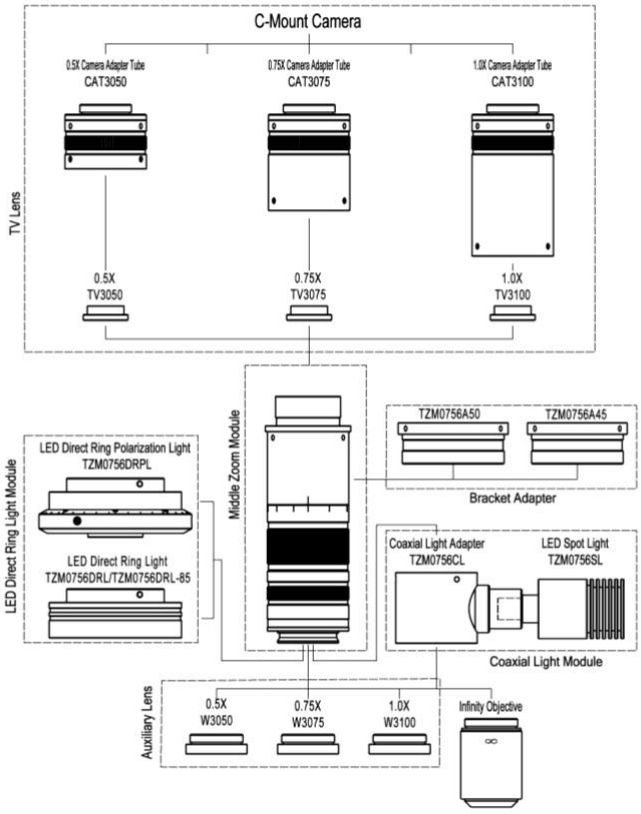

Figure 7-36 The five modules and the TZM0440 MZO

The basic module of TZM0440 MZO is TZM0440-W3100-TV3100-A50, it has 0.4X-4.0X zoom range and 10X zoom ratio. It is a high-quality precision MZO that provides high resolution and large depth of field. Its main features are shown below:

- With 0.4X~4.0X zoom range, 10X zoom ratio
- Larger NA: 0.01-0.07 (When using 1.00x Auxiliary Lens)
- Higher resolution: 27.5um-4.1um (When using 1.00x Auxiliary Lens)
- Larger field of view: 2.67mm-60mm (Object plane)
- Larger sensor size: 2/3” (When using 1.00x TV Lens)
- Working distance range: 86mm-174mm
- With adjustable BFL, parfocal in zoom range
- With adjustable center, the image center remains unchanged from 4.0x to 0.4x
- Compatible with infinity objectives (both biological and metallographic)
- Compact size: 194 mm (length) × 40 mm (diameter)
- Auxiliary Lens with 0.50x, 0.75x, 1.00x magnification (Optional)
- TV Lens with 0.50x, 0.75x, 1.00x magnification (Optional)
- Brightness adjustable LED Direct Ring Light (Optional)
- Brightness adjustable LED Direct Ring Polarization Light (Optional)
- Brightness adjustable LED Coaxial Light (Optional)
- LED Transmissive Light (Optional)
- 45mm or 50mm Bracket Adapter (Optional)

TOUPTEK PHOTONICS
WE KNOW IMAGES, WE MAKE CAMERAS

Figure 7-37 The TZM0440 MZO with different configuration

7.6.2 TZM0440 MZO's Middle Zoom Module

Order Number	Meaning	TZM0440	Postfix meaning
TZM0440	Ordinary Middle Zoom Module	ZM: Zoom 0440: 0.4X~4.0X	NA
TZM0440D	Middle Zoom Module with detent to fix the magnification function		D: Detent

7.6.3 TZM0440 MZO's Auxiliary Lens

Order number	Magnification	Working distance（mmm）	Field of View in the object side(TV3050，1/3"sensor)	
			Lower magnification	Higher magnification
W3050	0.5X	174	60.00mm	3.00mm
W3075	0.75X	115	40.00mm	2.00mm
W3100	1.00X	86	30.00mm	1.50mm

Note: The same Auxiliary Lens with different TV lens is just used to adapt to different size image sensor, which will not have much impact on the field of view of the MZO.

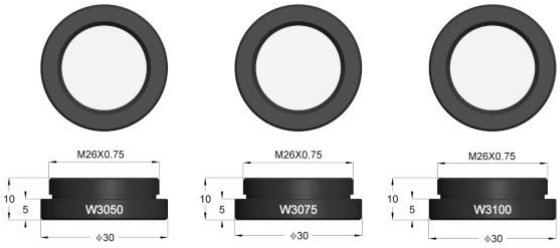

Figure 7-38 The Auxiliary Lens for TZM0440 MZO

7.6.4 TZM0440 MZO's TV Lens

Order number	The maximum compatible sensor size
TV3050	1/3"
TV3075	1/1.8"
TV3100	2/3"

Note: Smaller image sensors can also be used for TV Lens with higher magnification, but in this way, the FOV of MZO will be reduced.

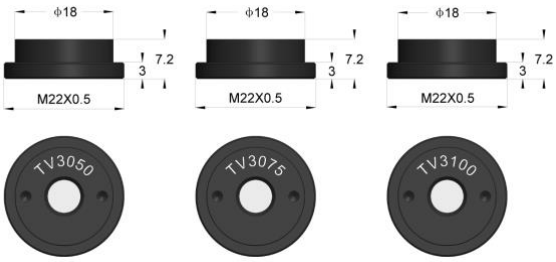

Figure 7-39 TV Lens with different magnification for TZM0440

TOUPTEK PHOTONICS
WE KNOW IMAGES, WE MAKE CAMERAS

7.6.5 TZM0440 MZO's Bracket Adapter

The installation method of the Bracket Adapter (TZM0756A45, TZM0756A50) and bracket is shown below.

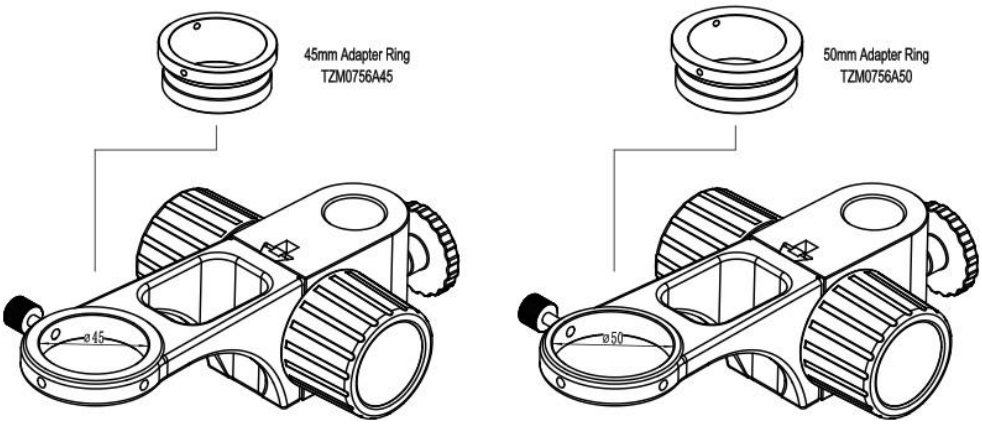

Figure 7-40 TZM0440 MZO's Bracket Adapter

7.6.6 TZM0440 MZO's Optional Module

The Optional Modules include LED Direct Ring Light Module (including LED Direct Ring Light Module and LED Direct Ring Polarization Light Module), Coaxial Light Module (composed of Coaxial Light Adapter and LED Spot Light) and Transmissive Light Module. The currently possible samples are shown in table below.

Module	Order Number	Description
LED Direct Ring Light Module	TZM0756DRL-65，TZM0756DRL-85	LED Direct Ring Light
	TZM0756DRPL-65	LED Direct Ring Polarization Light
Coaxial Light Module	TZM0756CL+TZM0756SL	Coaxial Light Adapter + LED Spot Light
Transmissive Light Module	TZM0756TL	LED Transmissive Light
Power of Light Source	40600014	US:POWER-U-12V1A(Power Adapter American Standard)
	40600015	DE: POWER-E-12V1A(Power Adapter European standard

7.6.7 The Optical Specifications of TZM0440 MZO with Different Auxiliary &TV Lens

The optical specifications of TZM0440 MZO with different Auxiliary Lens and TV Lens are shown in table below. Auxiliary Lens and TV Lens with 1.00x(TZM0440-W3100-TV3100) are listed in the left-up cell. Its data is the basis of the other parameters in the whole table.

Auxiliary Lens	Specification	TV3100 2/3"(D=11mm)		TV3050 1/3"(D=6mm)		TV3075 1/2"(D=8mm)	
W3100 WD 86mm	PMAG	0.40-4.00		0.20-2.00		0.30-3.00	
	DFOV/mm	27.50	2.75	30.00	3.00	26.67	2.67
	NA	0.010	0.067	0.010	0.067	0.010	0.067
W3050 WD 174mm	PMAG	0.20-2.00		0.10-1.00		0.15-1.50	
	DFOV/mm	55.00	5.50	60.00	6.00	53.33	5.33
	NA	0.005	0.033	0.005	0.033	0.005	0.033
W3075 WD 115mm	PMAG	0.30-3.00		0.15-1.50		0.23-2.25	
	DFOV/mm	36.67	3.67	40.00	4.00	35.56	3.56
	NA	0.008	0.050	0.008	0.050	0.008	0.050

WD: Working Distance; PMAG: Primary Magnification; DFOV: Diagonal Field of View in the object side; NA: Numerical Aperture;

Note: Infinity corrected objectives limit system's usable zoom range due to uneven illumination. The maximum sensor size is 2/3".

7.6.8 The Dimension of TZM0440 MZO with Different Light Module

The dimension of TZM0440 series MZO with different Auxiliary Lens and TV Lens is shown below:

TOUPTEK PHOTONICS
WE KNOW IMAGES, WE MAKE CAMERAS

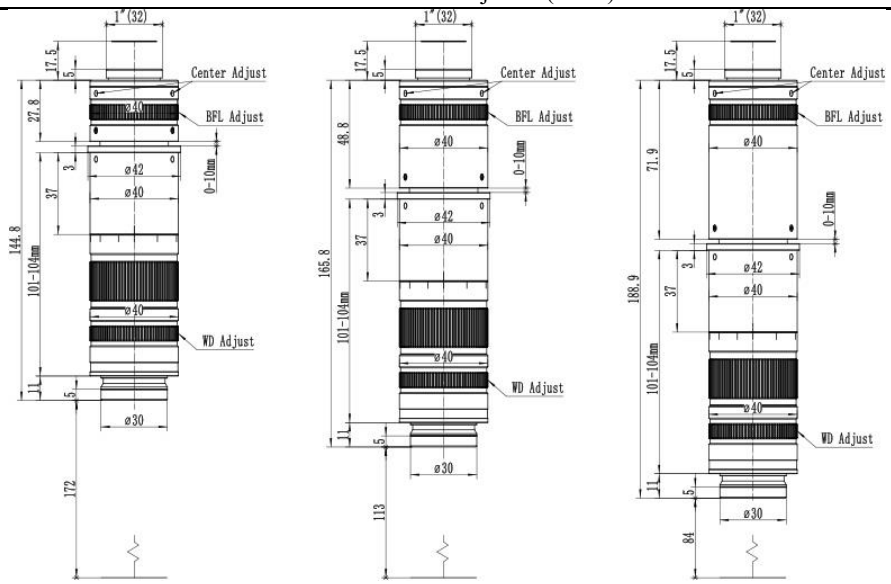

Figure 7-41 Dimension of TZM0440 series MZO with different Auxiliary Lens and TV Lens
a) TZM0440-W3050-TV3050; b) TZM0440-W3075-TV3075 c) TZM0440-W3100-TV3100

The length of the MZO with different TV Lens will be slightly different. The length of TZM0440-W3050-TV3050 is 144.8mm, it is much shorter than most of the MZO in the market.

7.6.9 How to Configure TZM0440 MZO

The corresponding parameters of TZM0440 MZO are listed in below. A specific combination can be determined according to the following steps.

1. Confirm the possible range of 1) DFOV and 2) Working Distance in the object space to choose the Auxiliary Lens.
2. Choose the M26x0.705 to M20x0.705 Objective Adapter, if the M20x0.705 mount infinity objective is used.
3. Confirm the camera Image Area Size, it can be 1) Sensor Size (1/x in inch), 2) Image Diagonal Length, 3) Image Width or 4) Image Height to choose the right TV Lens.
4. Choose the 45mm or 50 mm Bracket Adapter according to the diameter of the bracket hole diameter.
5. Choose the LED Direct Ring Light Module for the reflective illumination.
6. Choose the Coaxial Light Module if coaxial illumination is required.
7. Choose the Transmissive Light Module if transmissive illumination is required.
8. Choose the Camera Module.

We offer a variety of microscope cameras. Customers could get the detailed information of our cameras on the official website (http://www.touptek.com/) and choose the appropriate ones.

The combinations of different the Auxiliary Lens, The Middle Zoom Module and the TV Lens. With this figure, user can configure MZO with different magnification to fit different sensor and different application

Auxiliary Lens-Main Zoom Module-TV Lens	WD(mm)	PMAG	DFOV(mm)	NAO	Camera
TZM0440-W3050-TV3050	174	0.1X-1.0X	60.00-6.00	0.005-0.033	1/3inch
TZM0440-W3075-TV3050	115	0.15X-1.5X	40.00-4.00	0.008-0.05	
TZM0440-W3100-TV3050	86	0.2X-2.0X	30.00-3.00	0.010-0.067	
TZM0440-W3050-TV3075	174	0.15X-1.5X	53.33-5.33	0.005-0.033	1/2inch
TZM0440-W3075-TV3075	115	0.23X-2.23X	35.56-3.56	0.008-0.005	
TZM0440-W3100-TV3075	86	0.3X-3.0X	26.67-2.67	0.010-0.067	
TZM0440-W3050-TV3100	174	0.2X-2.0X	55.00-5.5	0.005-0.033	2/3inch
TZM0440-W3075-TV3100	115	0.3X-3.0X	36.67-3.67	0.008-0.05	
TZM0440-W3100-TV3100	86	0.4X-4.0X	27.50-2.75	0.010-0.067	

7.6.10 TZM0440 MZO's Packing List

The packing information of the TZM0440 MZO is as follows:

Figure 7-42 The TZM0440 main body, including Auxiliary Lens Module, Middle Zoom Module, TV Lens, Camera Adapter Tube and Bracket Adapter

7.6.11 Order List of TZM0440 MZO

7.6.11.1 TZM0440 Function Module Optional Order List

Module	Order number	Quantity	Remarks	Description
Middle Zoom Module	TZM0440			Ordinary Middle Zoom Module
	TZM0440D			Middle Zoom Module with detent
Auxiliary Lens Module	W3050			0.50X Object Lens
	W3075			0.75X Object Lens
	W3100			1.0X Object Lens
	ON-XX			Biological Objective
	ON-YY			Metallographic Objective
	Objective Adapter			M26x0.706 to M20x0.706
TV Lens	TV3050			For 1/3" Sensor
	TV3075			For 1/1.8" Sensor
	TV3100			For 2/3" Sensor
Bracket Adapter	A45			45mm Bracket Adapter
	A50			50mm Bracket Adapter
Coaxial Light Module	TZM0756CL+TZM0756SL			Coaxial Light Adapter + LED Spot Light
LED Direct Ring Light Module	TZM0756DRL-65			LED Direct Ring Light
	TZM0756DRL-85			LED Direct Ring Light
	TZM0756DRPL			LED Direct Ring Polarization Light
Transmissive Light Module	TZM0756TL			LED Transmissive Light
Power of Light Source	40600014			POWER-U-12V1A(American Standard)
	40600015			POWER-E-12V1A(European standard)

7.6.11.2 TZM0440 Monocular Zoom Object Package Order List

Order number		Quantity	Remarks
Package Name	TZM0440□-W3□□□-TV3□□□-A□□		
	TZM0440□-W3□□□-TV3□□□-A□□		
	TZM0440□-W3□□□-TV3□□□-A□□		
	TZM0440□-W3□□□-TV3□□□-A□□		
	TZM0440□-W3□□□-TV3□□□-A□□		
	TZM0440□-W3□□□-TV3□□□-A□□		
	TZM0440□-W3□□□-TV3□□□-A□□		
	TZM0440□-W3□□□-TV3□□□-A□□		
	TZM0440□-W3□□□-TV3□□□-A□□		
	TZM0440□-W3□□□-TV3□□□-A□□		

TOUPTEK PHOTONICS
WE KNOW IMAGES, WE MAKE CAMERAS

Remarks
Remarks：Users or salesmen can directly write the corresponding module name, number of sets, and other special requirements in the remarks with their own professional knowledge.

7.6.11.3 TZM0440 Order List of Other Accessories

Module	Order number	Quantity	Remarks	Description
Auxiliary Lens Module	W3050			0.50X Object Lens
	W3075			0.75X Object Lens
	W3100			1.0X Object Lens
	ON-XX			Biological Objective
	ON-YY			Metallographic Objective
	Objective Adapter			M26x0.706 to M20x0.706
TV Lens	TV3050			For 1/3" Sensor
	TV3075			For 1/1.8" Sensor
	TV3100			For 2/3" Sensor
Bracket Adapter	A45			45mm Bracket Adapter
	A50			50mm Bracket Adapter
Coaxial Light Module	TZM0756CL+TZM0756SL			Coaxial Light Adapter + LED Spot Light
LED Direct Ring Light Module	TZM0756DRL-65			LED Direct Ring Light
	TZM0756DRL-85			LED Direct Ring Light
	TZM0756DRPL-65			LED Direct Ring Polarization Light
Transmissive Light Module	TZM0756TL			LED Transmissive Light
Power of Light Source	40600014			POWER-U-12V1A(MSA-C1000IC12.0-12H-US), Power Adapter American Standard
	40600015			POWER-E-12V1A(MSA-C10001C12.0-12W-DE), Power Adapter European standard

7.7 TZM0660 MZO

7.7.1 The Configuration of TZM0660 MZO with Five Modules

TZM0660 MZO(Monocular Zoom Objective) is an ideal choice for most applications that requires multiple magnifications or for those that prohibits continual manual refocusing. The applications of the TZM0660 MZO are: machine vision; small details inspection; industrial inspection especially electronic components; scientific research; medical industry; education industry.

The modular design of TZM0660 MZO is showed in below. The design is based on the bilateral parallel light path principle and consists of five basic modules. The five basic modules are: Middle Zoom Module, Auxiliary Lens Module, TV Lens Module, Bracket Adapter Module and Optional Module(Not show in the figure).

TZM0660 MZO can be combined with Camera Module (optional) to form a digital monocular zoom microscope.

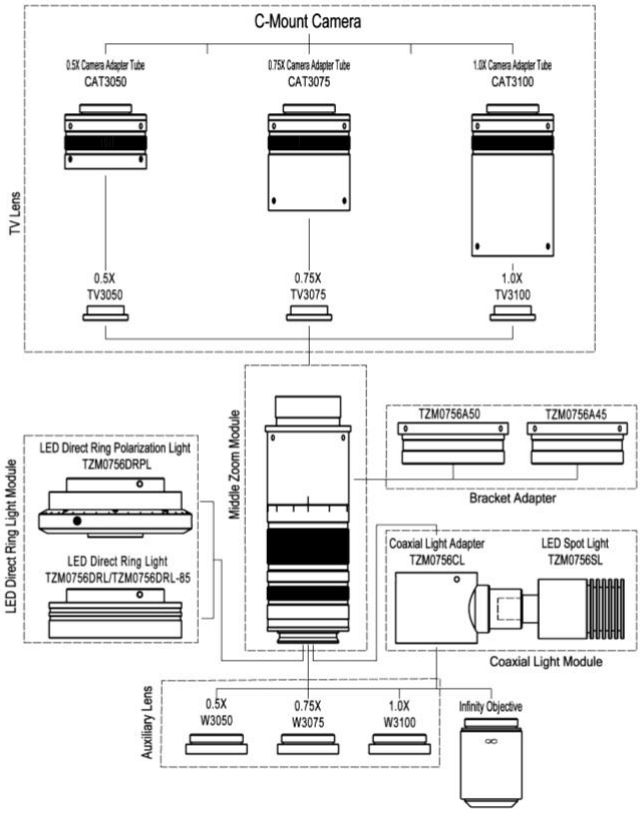

Figure 7-43 The five modules and the TZM0660 MZO

The basic module of TZM0660 MZO is TZM0660-W3100-TV3100-A50, it has 0.6X-6.0X zoom range and 10X zoom ratio. It is a high-quality precision MZO that provides high resolution and large depth of field. Its main features are shown below:

- With 0.6X~6.0X zoom range, 10X zoom ratio
- Larger NA: 0.015-0.09 (When using 1.00x Auxiliary Lens)
- Higher resolution: 18.3um-3.1um (When using 1.00x Auxiliary Lens)
- Larger field of view: 1.78mm-40mm (Object plane)
- Larger sensor size: 2/3” (When using 1.00x TV Lens)
- Working distance range: 86mm-174mm
- With adjustable BFL, parfocal in zoom range
- With adjustable center, the image center remains unchanged from 6.0x to 0.6x
- Compatible with infinity objectives (both biological and metallographic)
- Compact size: 194 mm (length) × 40 mm (diameter)
- Auxiliary Lens with 0.50x, 0.75x, 1.00x magnification (Optional)
- TV Lens with 0.50x, 0.75x, 1.00x magnification (Optional)
- Brightness adjustable LED Direct Ring Light (Optional)
- Brightness adjustable LED Direct Ring Polarization Light (Optional)
- Brightness adjustable LED Coaxial Light (Optional)
- LED Transmissive Light (Optional)
- 45mm or 50mm Bracket Adapter (Optional)

TOUPTEK PHOTONICS
WE KNOW IMAGES, WE MAKE CAMERAS

Figure 7-44 The TZM0660 MZO with different configuration

7.7.2 TZM0660 MZO's Middle Zoom Module

Order Number	Meaning	TZM0660	Postfix meaning
TZM0660	Ordinary Middle Zoom Module	ZM: Zoom 0660: 0.6X~6.0X	NA
TZM0660D	Middle Zoom Module with detent to fix the magnification function		D: Detent

7.7.3 TZM0660 MZO's Auxiliary Lens

Order number	Magnification	Working distance（mmm）	Field of View in the object side(TV3050，1/3"sensor)	
			Lower magnification	Higher magnification
W3050	0.5X	174	60.00mm	3.00mm
W3075	0.75X	115	40.00mm	2.00mm
W3100	1.00X	86	30.00mm	1.50mm

Note: The same Auxiliary Lens with different TV lens is just used to adapt to different size image sensor, which will not have much impact on the field of view of the MZO.

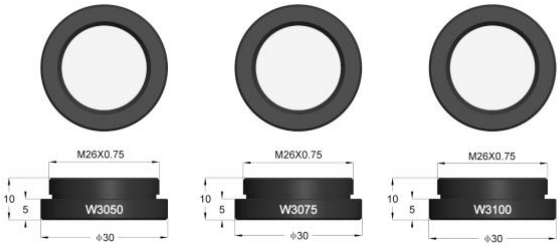

Figure 7-45 The Auxiliary Lens for TZM0660 MZO

7.7.4 TZM0660 MZO's TV Lens

Order number	The maximum compatible sensor size
TV3050	1/3"
TV3075	1/1.8"
TV3100	2/3"

Note: Smaller image sensors can also be used for TV Lens with higher magnification, but in this way, the FOV of MZO will be reduced.

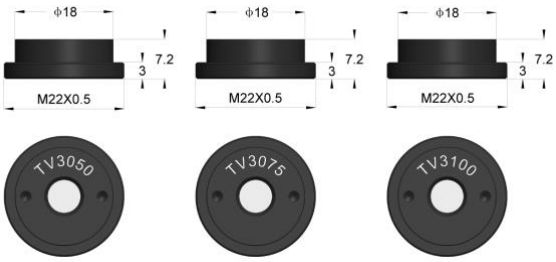

Figure 7-46 TV Lens with different magnification for TZM0660

TOUPTEK PHOTONICS
WE KNOW IMAGES, WE MAKE CAMERAS

7.7.5 TZM0660 MZO's Bracket Adapter

The installation method of the Bracket Adapter (TZM0756A45, TZM0756A50) and bracket is shown below.

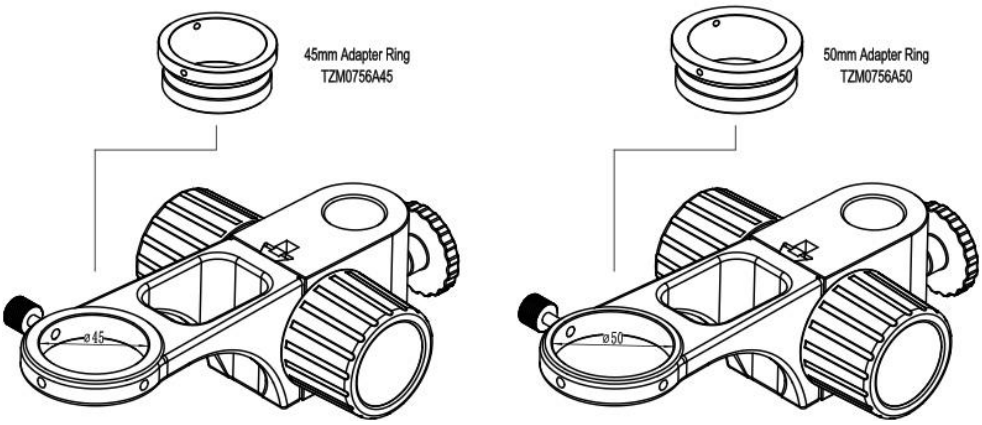

Figure 7-47 TZM0660 MZO's Bracket Adapter

7.7.6 TZM0660 MZO's Optional Module

The Optional Modules include LED Direct Ring Light Module (including LED Direct Ring Light Module and LED Direct Ring Polarization Light Module), Coaxial Light Module (composed of Coaxial Light Adapter and LED Spot Light) and Transmissive Light Module. The currently possible samples are shown in table below.

Module	Order Number	Description
LED Direct Ring Light Module	TZM0756DRL-65，TZM0756DRL-85	LED Direct Ring Light
	TZM0756DRPL-65	LED Direct Ring Polarization Light
Coaxial Light Module	TZM0756CL+TZM0756SL	Coaxial Light Adapter + LED Spot Light
Transmissive Light Module	TZM0756TL	LED Transmissive Light
Power of Light Source	40600014	US:POWER-U-12V1A(Power Adapter American Standard)
	40600015	DE: POWER-E-12V1A(Power Adapter European standard

7.7.7 The Optical Specifications of TZM0660 MZO with Different Auxiliary &TV Lens

The optical specifications of TZM0660 MZO with different Auxiliary Lens and TV Lens are shown in table below. Auxiliary Lens and TV Lens with 1.00x(TZM0660-W3100-TV3100) are listed in the left-up cell. Its data is the basis of the other parameters in the whole table.

Auxiliary Lens	Specification	TV3100 2/3"(D=11mm)		TV3050 1/3"(D=6mm)		TV3075 1/2"(D=8mm)	
W3100 WD 86mm	PMAG	0.60-6.00		0.30-3.00		0.45-4.50	
	DFOV/mm	18.33	1.83	20.00	2.00	17.78	1.78
	NA	0.015	0.090	0.015	0.090	0.015	0.090
W3050 WD 174mm	PMAG	0.30-3.00		0.15-1.50		0.23-2.25	
	DFOV/mm	36.67	3.67	40.00	4.00	35.56	3.56
	NA	0.007	0.045	0.007	0.045	0.007	0.045
W3075 WD 115mm	PMAG	0.45-4.50		0.23-2.25		0.34-3.38	
	DFOV/mm	24.44	2.44	26.67	2.67	23.70	2.37
	NA	0.011	0.068	0.011	0.068	0.011	0.068

WD: Working Distance; PMAG: Primary Magnification; DFOV: Diagonal Field of View in the object side; NA: Numerical Aperture;

Note: Infinity corrected objectives limit system's usable zoom range due to uneven illumination. The maximum sensor size is 2/3".

7.7.8 The Dimension of TZM0660 MZO with Different Light Module

The dimension of TZM0660 series MZO with different Auxiliary Lens and TV Lens is shown below:

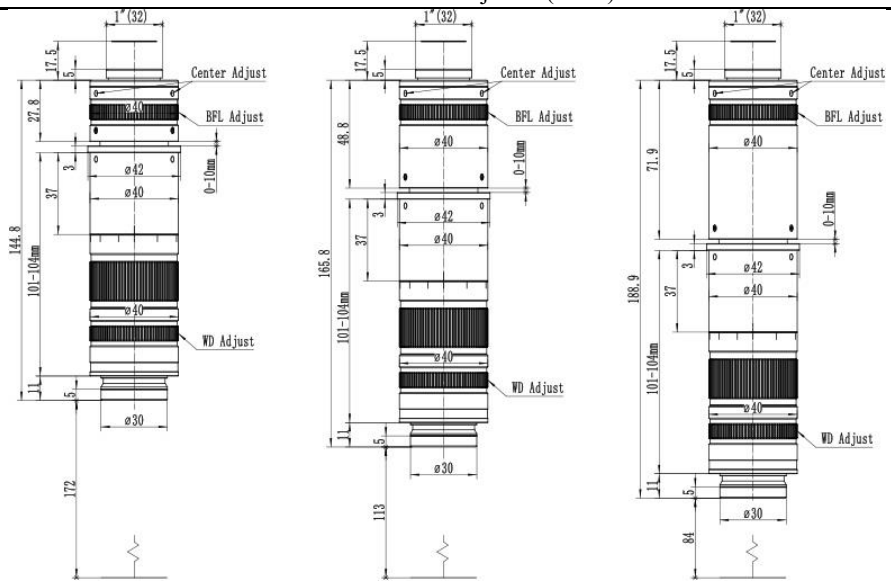

Figure 7-48 Dimension of TZM0660 series MZO with different Auxiliary Lens and TV Lens
a) TZM0660-W3050-TV3050; b) TZM0660-W3075-TV3075 c) TZM0660-W3100-TV3100

The length of the MZO with different TV Lens will be slightly different. The length of TZM0660-W3050-TV3050 is 144.8mm, it is much shorter than most of the MZO in the market.

7.7.9 How to Configure TZM0660 MZO

The corresponding parameters of TZM0660 MZO are listed in below. A specific combination can be determined according to the following steps.

1. Confirm the possible range of 1) DFOV and 2) Working Distance in the object space to choose the Auxiliary Lens.
2. Choose the M26x0.705 to M20x0.705 Objective Adapter, if the M20x0.705 mount infinity objective is used.
3. Confirm the camera Image Area Size, it can be 1) Sensor Size (1/x in inch), 2) Image Diagonal Length, 3) Image Width or 4) Image Height to choose the right TV Lens.
4. Choose the 45mm or 50 mm Bracket Adapter according to the diameter of the bracket hole diameter.
5. Choose the LED Direct Ring Light Module for the reflective illumination.
6. Choose the Coaxial Light Module if coaxial illumination is required.
7. Choose the Transmissive Light Module if transmissive illumination is required.
8. Choose the Camera Module.

We offer a variety of microscope cameras. Customers could get the detailed information of our cameras on the official website (http://www.touptek.com/) and choose the appropriate ones.

The combinations of different the Auxiliary Lens, The Middle Zoom Module and the TV Lens. With this figure, user can configure MZO with different magnification to fit different sensor and different application

Auxiliary Lens-Main Zoom Module-TV Lens	WD(mm)	PMAG	DFOV(mm)	NAO	Camera
TZM0660-W3050-TV3050	174	0.15X-1.5X	40.00-4.00	0.007-0.045	1/3inch
TZM0660-W3075-TV3050	115	0.23X-2.3X	26.67-2.67	0.011-0.068	
TZM0660-W3100-TV3050	86	0.3X-3.0X	20.00-2.00	0.015-0.09	
TZM0660-W3050-TV3075	174	0.23X-2.3X	35.56-3.56	0.007-0.045	1/2inch
TZM0660-W3075-TV3075	115	0.34X-3.4X	23.7-2.37	0.011-0.068	
TZM0660-W3100-TV3075	86	0.45X-4.5X	17.78-1.78	0.015-0.09	
TZM0660-W3050-TV3100	174	0.3X-3.0X	36.67-3.67	0.007-0.045	2/3inch
TZM0660-W3075-TV3100	115	0.45X-4.5X	24.44-2.44	0.011-0.068	
TZM0660-W3100-TV3100	86	0.6X-6.0X	18.33-1.83	0.015-0.09	

7.7.10 TZM0660 MZO's Packing List

The packing information of the TZM0660 MZO is as follows:

Figure 7-49 The TZM0660 main body, including Auxiliary Lens Module, Middle Zoom Module, TV Lens, Camera Adapter Tube and Bracket Adapter

7.7.11 Order List of TZM0660 MZO

7.7.11.1 TZM0660 Function Module Optional Order List

Module	Order number	Quantity	Remarks	Description
Middle Zoom Module	TZM0660			Ordinary Middle Zoom Module
	TZM0660D			Middle Zoom Module with detent
Auxiliary Lens Module	W3050			0.50X Object Lens
	W3075			0.75X Object Lens
	W3100			1.0X Object Lens
	ON-XX			Biological Objective
	ON-YY			Metallographic Objective
	Objective Adapter			M26x0.706 to M20x0.706
TV Lens	TV3050			For 1/3" Sensor
	TV3075			For 1/1.8" Sensor
	TV3100			For 2/3" Sensor
Bracket Adapter	A45			45mm Bracket Adapter
	A50			50mm Bracket Adapter
Coaxial Light Module	TZM0756CL+TZM0756SL			Coaxial Light Adapter + LED Spot Light
LED Direct Ring Light Module	TZM0756DRL-65			LED Direct Ring Light
	TZM0756DRL-85			LED Direct Ring Light
	TZM0756DRPL			LED Direct Ring Polarization Light
Transmissive Light Module	TZM0756TL			LED Transmissive Light
Power of Light Source	40600014			POWER-U-12V1A(American Standard)
	40600015			POWER-E-12V1A(European standard)

7.7.11.2 TZM0660 Monocular Zoom Object Package Order List

	Order number	Quantity	Remarks
Package Name	TZM0660□-W3□□□-TV3□□□-A□□		
	TZM0660□-W3□□□-TV3□□□-A□□		
	TZM0660□-W3□□□-TV3□□□-A□□		
	TZM0660□-W3□□□-TV3□□□-A□□		
	TZM0660□-W3□□□-TV3□□□-A□□		
	TZM0660□-W3□□□-TV3□□□-A□□		
	TZM0660□-W3□□□-TV3□□□-A□□		
	TZM0660□-W3□□□-TV3□□□-A□□		
	TZM0660□-W3□□□-TV3□□□-A□□		
	TZM0660□-W3□□□-TV3□□□-A□□		

TOUPTEK PHOTONICS
WE KNOW IMAGES, WE MAKE CAMERAS

Remarks
Remarks：Users or salesmen can directly write the corresponding module name, number of sets, and other special requirements in the remarks with their own professional knowledge.

7.7.11.3 TZM0660 Order List of Other Accessories

Module	Order number	Quantity	Remarks	Description
Auxiliary Lens Module	W3050			0.50X Object Lens
	W3075			0.75X Object Lens
	W3100			1.0X Object Lens
	ON-XX			Biological Objective
	ON-YY			Metallographic Objective
	Objective Adapter			M26x0.706 to M20x0.706
TV Lens	TV3050			For 1/3" Sensor
	TV3075			For 1/1.8" Sensor
	TV3100			For 2/3" Sensor
Bracket Adapter	A45			45mm Bracket Adapter
	A50			50mm Bracket Adapter
Coaxial Light Module	TZM0756CL+TZM0756SL			Coaxial Light Adapter + LED Spot Light
LED Direct Ring Light Module	TZM0756DRL-65			LED Direct Ring Light
	TZM0756DRL-85			LED Direct Ring Light
	TZM0756DRPL-65			LED Direct Ring Polarization Light
Transmissive Light Module	TZM0756TL			LED Transmissive Light
Power of Light Source	40600014			POWER-U-12V1A(MSA-C1000IC12.0-12H-US), Power Adapter American Standard
	40600015			POWER-E-12V1A(MSA-C10001C12.0-12W-DE), Power Adapter European standard

TOUPTEK PHOTONICS
WE KNOW IMAGES, WE MAKE CAMERAS

7.8 TZM0640 MZO

7.8.1 The Configuration of TZM0640 MZO with Five Modules

TZM0640 MZO(Monocular Zoom Objective) is an ideal choice for most applications that requires multiple magnifications or for those that prohibits continual manual refocusing. The applications of the TZM0640 MZO are: machine vision; small details inspection; industrial inspection especially electronic components; scientific research; medical industry; education industry.

The modular design of TZM0640 MZO is showed in below. The design is based on the bilateral parallel light path principle and consists of five basic modules. The five basic modules are: Middle Zoom Module, Auxiliary Lens Module, TV Lens Module, Bracket Adapter Module and Optional Module(Not show in the figure).

TZM0640 MZO can be combined with Camera Module (optional) to form a digital monocular zoom microscope.

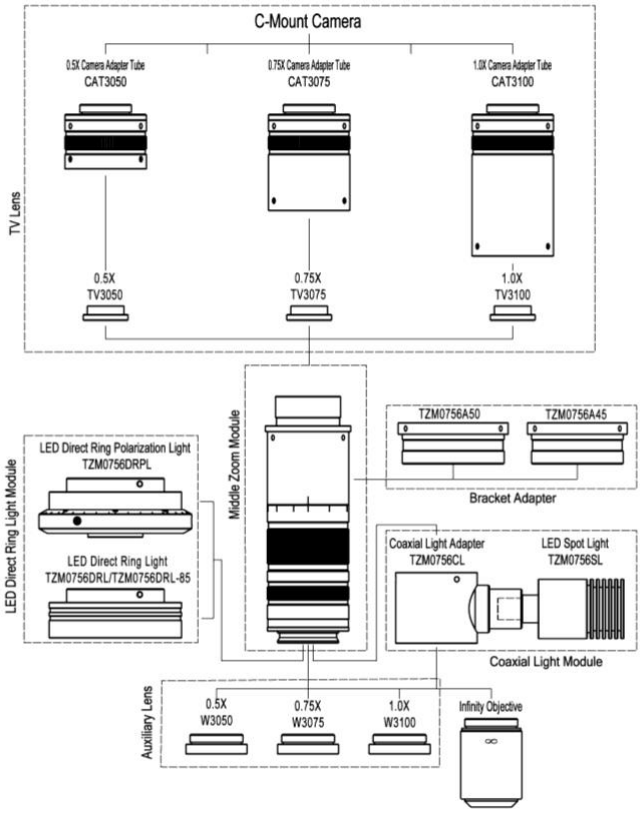

Figure 7-50 The five modules and the TZM0640 MZO

The basic module of TZM0640 MZO is TZM0640-W3100-TV3100-A50, it has 0.6X-4.0X zoom range and 6.5X zoom ratio. It is a high-quality precision MZO that provides high resolution and large depth of field. Its main features are shown below:

- With 0.6X~4.0X zoom range, 6.5X zoom ratio
- Larger NA: 0.015-0.067 (When using 1.00x Auxiliary Lens)
- Higher resolution: 18.3um-4.1um (When using 1.00x Auxiliary Lens)
- Larger field of view: 2.67mm-40mm (Object plane)
- Larger sensor size: 2/3” (When using 1.00x TV Lens)
- Working distance range: 86mm-174mm
- With adjustable BFL, parfocal in zoom range
- With adjustable center, the image center remains unchanged from 4.0x to 0.6x
- Compatible with infinity objectives (both biological and metallographic)
- Compact size: 194 mm (length) × 40 mm (diameter)
- Auxiliary Lens with 0.50x, 0.75x, 1.00x magnification (Optional)
- TV Lens with 0.50x, 0.75x, 1.00x magnification (Optional)
- Brightness adjustable LED Direct Ring Light (Optional)
- Brightness adjustable LED Direct Ring Polarization Light (Optional)
- Brightness adjustable LED Coaxial Light (Optional)
- LED Transmissive Light (Optional)
- 45mm or 50mm Bracket Adapter (Optional)

TOUPTEK PHOTONICS
WE KNOW IMAGES, WE MAKE CAMERAS

Figure 7-51 The TZM0640 MZO with different configuration

7.8.2 TZM0640 MZO's Middle Zoom Module

Order Number	Meaning	TZM0640	Postfix meaning
TZM0640	Ordinary Middle Zoom Module	ZM: Zoom 064: 0.6X~4.0X	NA
TZM0640D	Middle Zoom Module with detent to fix the magnification function		D: Detent

7.8.3 TZM0640 MZO's Auxiliary Lens

Order number	Magnification	Working distance（mmm）	Field of View in the object side(TV3050，1/3"sensor)	
			Lower magnification	Higher magnification
W3050	0.5X	174	60.00mm	3.00mm
W3075	0.75X	115	40.00mm	2.00mm
W3100	1.00X	86	30.00mm	1.50mm

Note: The same Auxiliary Lens with different TV lens is just used to adapt to different size image sensor, which will not have much impact on the field of view of the MZO.

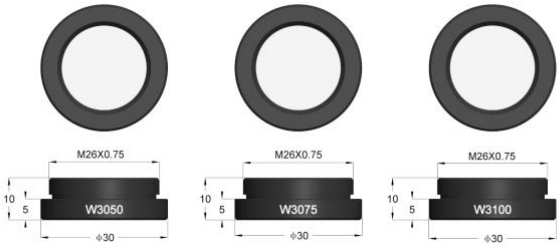

Figure 7-52 The Auxiliary Lens for TZM0640 MZO

7.8.4 TZM0640 MZO's TV Lens

Order number	The maximum compatible sensor size
TV3050	1/3"
TV3075	1/1.8"
TV3100	2/3"

Note: Smaller image sensors can also be used for TV Lens with higher magnification, but in this way, the FOV of MZO will be reduced.

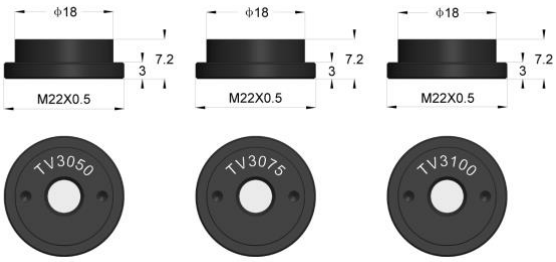

Figure 7-53 TV Lens with different magnification for TZM0640

TOUPTEK PHOTONICS
WE KNOW IMAGES, WE MAKE CAMERAS

7.8.5 TZM0640 MZO's Bracket Adapter

The installation method of the Bracket Adapter (TZM0756A45, TZM0756A50) and bracket is shown below.

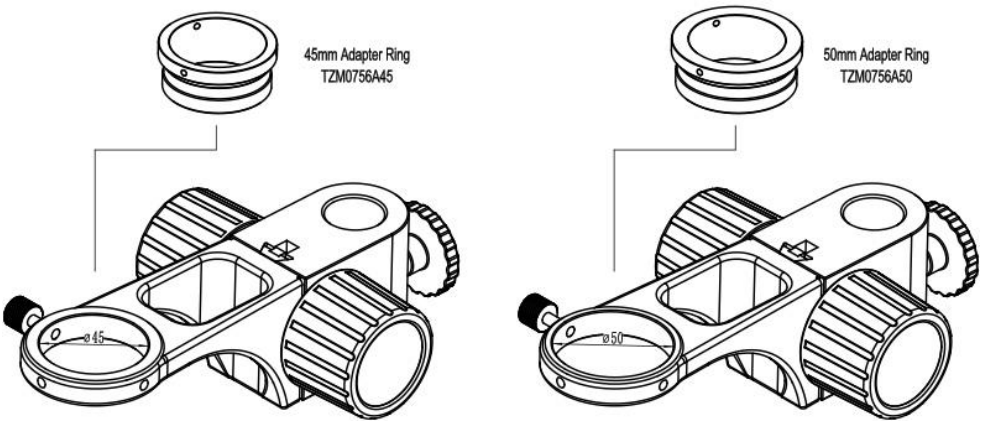

Figure 7-54 TZM0640 MZO's Bracket Adapter

7.8.6 TZM0640 MZO's Optional Module

The Optional Modules include LED Direct Ring Light Module (including LED Direct Ring Light Module and LED Direct Ring Polarization Light Module), Coaxial Light Module (composed of Coaxial Light Adapter and LED Spot Light) and Transmissive Light Module. The currently possible samples are shown in table below.

Module	Order Number	Description
LED Direct Ring Light Module	TZM0756DRL-65，TZM0756DRL-85	LED Direct Ring Light
	TZM0756DRPL-65	LED Direct Ring Polarization Light
Coaxial Light Module	TZM0756CL+TZM0756SL	Coaxial Light Adapter + LED Spot Light
Transmissive Light Module	TZM0756TL	LED Transmissive Light
Power of Light Source	40600014	US:POWER-U-12V1A(Power Adapter American Standard)
	40600015	DE: POWER-E-12V1A(Power Adapter European standard

7.8.7 The Optical Specifications of TZM0640 MZO with Different Auxiliary &TV Lens

The optical specifications of TZM0640 MZO with different Auxiliary Lens and TV Lens are shown in table below. Auxiliary Lens and TV Lens with 1.00x(TZM0640-W3100-TV3100) are listed in the left-up cell. Its data is the basis of the other parameters in the whole table.

Auxiliary Lens	Specification	TV3100 2/3"(D=11mm)		TV3050 1/3"(D=6mm)		TV3075 1/2"(D=8mm)	
W3100 WD 86mm	PMAG	0.60-4.00		0.30-2.00		0.45-3.00	
	DFOV/mm	18.33	2.75	20.00	3.00	17.78	2.67
	NA	0.015	0.067	0.015	0.067	0.015	0.067
W3050 WD 174mm	PMAG	0.30-2.00		0.15-1.00		0.23-1.50	
	DFOV/mm	36.67	5.50	40.00	6.00	35.56	5.33
	NA	0.007	0.033	0.007	0.033	0.007	0.033
W3075 WD 115mm	PMAG	0.45-3.00		0.23-1.50		0.34-2.25	
	DFOV/mm	24.44	3.67	26.67	4.00	23.70	3.56
	NA	0.011	0.050	0.011	0.050	0.011	0.050

WD: Working Distance; PMAG: Primary Magnification; DFOV: Diagonal Field of View in the object side; NA: Numerical Aperture;

Note: Infinity corrected objectives limit system's usable zoom range due to uneven illumination. The maximum sensor size is 2/3".

7.8.8 The Dimension of TZM0640 MZO with Different Light Module

The dimension of TZM0640 series MZO with different Auxiliary Lens and TV Lens is shown below:

TOUPTEK PHOTONICS
WE KNOW IMAGES, WE MAKE CAMERAS

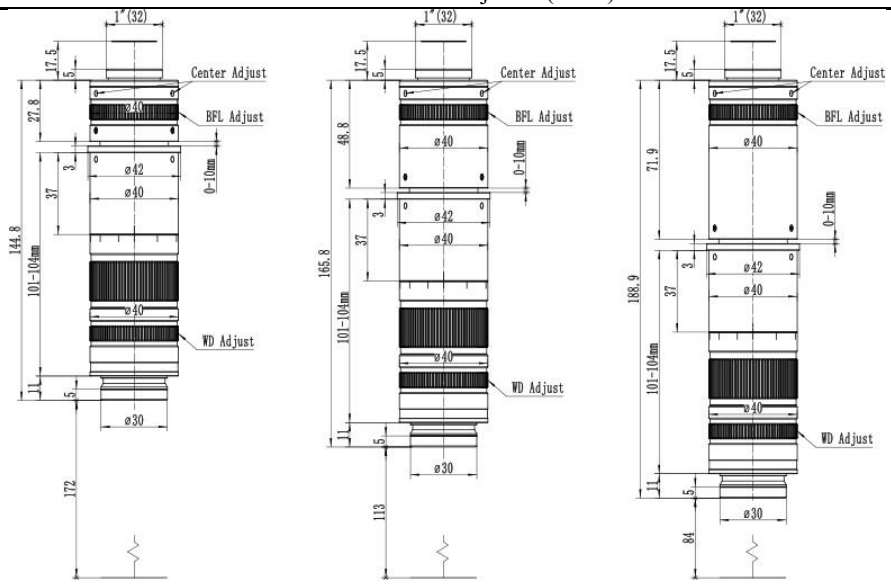

Figure 7-55 Dimension of TZM0640 series MZO with different Auxiliary Lens and TV Lens
a) TZM0640-W3050-TV3050; b) TZM0640-W3075-TV3075 c) TZM0640-W3100-TV3100

The length of the MZO with different TV Lens will be slightly different. The length of TZM0640-W3050-TV3050 is 144.8mm, it is much shorter than most of the MZO in the market.

7.8.9 How to Configure TZM0640 MZO

The corresponding parameters of TZM0640 MZO are listed in below. A specific combination can be determined according to the following steps.

1. Confirm the possible range of 1) DFOV and 2) Working Distance in the object space to choose the Auxiliary Lens.
2. Choose the M26x0.705 to M20x0.705 Objective Adapter, if the M20x0.705 mount infinity objective is used.
3. Confirm the camera Image Area Size, it can be 1) Sensor Size (1/x in inch), 2) Image Diagonal Length, 3) Image Width or 4) Image Height to choose the right TV Lens.
4. Choose the 45mm or 50 mm Bracket Adapter according to the diameter of the bracket hole diameter.
5. Choose the LED Direct Ring Light Module for the reflective illumination.
6. Choose the Coaxial Light Module if coaxial illumination is required.
7. Choose the Transmissive Light Module if transmissive illumination is required.
8. Choose the Camera Module.

We offer a variety of microscope cameras. Customers could get the detailed information of our cameras on the official website (http://www.touptek.com/) and choose the appropriate ones.

The combinations of different the Auxiliary Lens, The Middle Zoom Module and the TV Lens. With this figure, user can configure MZO with different magnification to fit different sensor and different application

Auxiliary Lens-Main Zoom Module-TV Lens	WD(mm)	PMAG	DFOV(mm)	NAO	Camera
TZM0640-W3050-TV3050	174	0.15X-1.0X	40.00-6.00	0.007-0.033	1/3inch
TZM0640-W3075-TV3050	115	0.23X-1.5X	26.67-4.00	0.011-0.050	
TZM0640-W3100-TV3050	86	0.3X-2.0X	20.00-3.00	0.015-0.067	
TZM0640-W3050-TV3075	174	0.23X-1.5X	35.56-5.33	0.007-0.033	1/2inch
TZM0640-W3075-TV3075	115	0.34X-2.25X	23.7-3.56	0.011-0.050	
TZM0640-W3100-TV3075	86	0.45X-3.00X	17.78-2.67	0.015-0.067	
TZM0640-W3050-TV3100	174	0.3X-2.0X	36.67-5.50	0.007-0.033	2/3inch
TZM0640-W3075-TV3100	115	0.45X-3.00X	24.44-3.67	0.011-0.050	
TZM0640-W3100-TV3100	86	0.6X-4.0X	18.33-2.75	0.015-0.067	

7.8.10 TZM0640 MZO's Packing List

The packing information of the TZM0640 MZO is as follows:

TOUPTEK PHOTONICS
WE KNOW IMAGES, WE MAKE CAMERAS

Figure 7-56 The TZM0640 main body, including Auxiliary Lens Module, Middle Zoom Module, TV Lens, Camera Adapter Tube and Bracket Adapter

7.8.11 Order List of TZM0640 MZO

7.8.11.1 TZM0640 Function Module Optional Order List

Module	Order number	Quantity	Remarks	Description
Middle Zoom Module	TZM0640			Ordinary Middle Zoom Module
	TZM0640D			Middle Zoom Module with detent
Auxiliary Lens Module	W3050			0.50X Object Lens
	W3075			0.75X Object Lens
	W3100			1.0X Object Lens
	ON-XX			Biological Objective
	ON-YY			Metallographic Objective
	Objective Adapter			M26x0.706 to M20x0.706
TV Lens	TV3050			For 1/3" Sensor
	TV3075			For 1/1.8" Sensor
	TV3100			For 2/3" Sensor
Bracket Adapter	A45			45mm Bracket Adapter
	A50			50mm Bracket Adapter
Coaxial Light Module	TZM0756CL+TZM0756SL			Coaxial Light Adapter + LED Spot Light
LED Direct Ring Light Module	TZM0756DRL-65			LED Direct Ring Light
	TZM0756DRL-85			LED Direct Ring Light
	TZM0756DRPL			LED Direct Ring Polarization Light
Transmissive Light Module	TZM0756TL			LED Transmissive Light
Power of Light Source	40600014			POWER-U-12V1A(American Standard)
	40600015			POWER-E-12V1A(European standard)

7.8.11.2 TZM0640 Monocular Zoom Object Package Order List

Order number		Quantity	Remarks
Package Name	TZM0640□-W3□□□-TV3□□□-A□□		
	TZM0640□-W3□□□-TV3□□□-A□□		
	TZM0640□-W3□□□-TV3□□□-A□□		
	TZM0640□-W3□□□-TV3□□□-A□□		
	TZM0640□-W3□□□-TV3□□□-A□□		
	TZM0640□-W3□□□-TV3□□□-A□□		
	TZM0640□-W3□□□-TV3□□□-A□□		
	TZM0640□-W3□□□-TV3□□□-A□□		
	TZM0640□-W3□□□-TV3□□□-A□□		
	TZM0640□-W3□□□-TV3□□□-A□□		

TOUPTEK PHOTONICS
WE KNOW IMAGES, WE MAKE CAMERAS

Remarks
Remarks：Users or salesmen can directly write the corresponding module name, number of sets, and other special requirements in the remarks with their own professional knowledge.

7.8.11.3 TZM0640 Order List of Other Accessories

Module	Order number	Quantity	Remarks	Description
Auxiliary Lens Module	W3050			0.50X Object Lens
	W3075			0.75X Object Lens
	W3100			1.0X Object Lens
	ON-XX			Biological Objective
	ON-YY			Metallographic Objective
	Objective Adapter			M26x0.706 to M20x0.706
TV Lens	TV3050			For 1/3" Sensor
	TV3075			For 1/1.8" Sensor
	TV3100			For 2/3" Sensor
Bracket Adapter	A45			45mm Bracket Adapter
	A50			50mm Bracket Adapter
Coaxial Light Module	TZM0756CL+TZM0756SL			Coaxial Light Adapter + LED Spot Light
LED Direct Ring Light Module	TZM0756DRL-65			LED Direct Ring Light
	TZM0756DRL-85			LED Direct Ring Light
	TZM0756DRPL-65			LED Direct Ring Polarization Light
Transmissive Light Module	TZM0756TL			LED Transmissive Light
Power of Light Source	40600014			POWER-U-12V1A(MSA-C1000IC12.0-12H-US), Power Adapter American Standard
	40600015			POWER-E-12V1A(MSA-C10001C12.0-12W-DE), Power Adapter European standard

TOUPTEK PHOTONICS
WE KNOW IMAGES, WE MAKE CAMERAS

7.9 TZM0880 MZO

7.9.1 The Configuration of TZM0880 MZO with Five Modules

TZM0880 MZO(Monocular Zoom Objective) is an ideal choice for most applications that requires multiple magnifications or for those that prohibits continual manual refocusing. The applications of the TZM0880 MZO are: machine vision; small details inspection; industrial inspection especially electronic components; scientific research; medical industry; education industry.

The modular design of TZM0880 MZO is showed in below. The design is based on the bilateral parallel light path principle and consists of five basic modules. The five basic modules are: Middle Zoom Module, Auxiliary Lens Module, TV Lens Module, Bracket Adapter Module and Optional Module(Not show in the figure).

TZM0880 MZO can be combined with Camera Module (optional) to form a digital monocular zoom microscope.

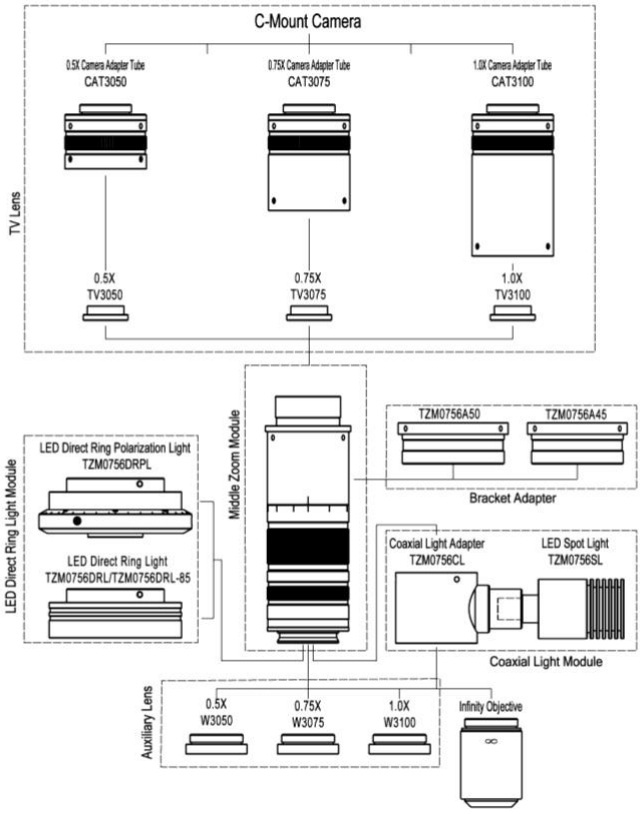

Figure 7-57 The five modules and the TZM0880 MZO

The basic module of TZM0880 MZO is TZM0880-W3100-TV3100-A50, it has 0.8X-8.0X zoom range and 10X zoom ratio. It is a high-quality precision MZO that provides high resolution and large depth of field. Its main features are shown below:

- With 0.8X~8.0X zoom range, 10X zoom ratio
- Larger NA: 0.02-0.11 (When using 1.00x Auxiliary Lens)
- Higher resolution: 15.3mm-2.45mm (When using 1.00x Auxiliary Lens)
- Larger field of view: 1.33mm-30mm (Object plane)
- Larger sensor size: 2/3” (When using 1.00x TV Lens)
- Working distance range: 86mm-174mm
- With adjustable BFL, parfocal in zoom range
- With adjustable center, the image center remains unchanged from 8.0x to 0.8x
- Compatible with infinity objectives (both biological and metallographic)
- Compact size: 194 mm (length) × 40 mm (diameter)
- Auxiliary Lens with 0.50x, 0.75x, 1.00x magnification (Optional)
- TV Lens with 0.50x, 0.75x, 1.00x magnification (Optional)
- Brightness adjustable LED Direct Ring Light (Optional)
- Brightness adjustable LED Direct Ring Polarization Light (Optional)
- Brightness adjustable LED Coaxial Light (Optional)
- LED Transmissive Light (Optional)
- 45mm or 50mm Bracket Adapter (Optional)

TOUPTEK PHOTONICS
WE KNOW IMAGES, WE MAKE CAMERAS

Figure 7-58 The TZM0880 MZO with different configuration

7.9.2 TZM0880 MZO's Middle Zoom Module

Order Number	Meaning	TZM0880	Postfix meaning
TZM0880	Ordinary Middle Zoom Module	ZM: Zoom 0880: 0.8X~8.0X	NA
TZM0880D	Middle Zoom Module with detent to fix the magnification function		D: Detent

7.9.3 TZM0880 MZO's Auxiliary Lens

Order number	Magnification	Working distance（mmm）	Field of View in the object side(TV3050，1/3"sensor)	
			Lower magnification	Higher magnification
W3050	0.5X	174	60.00mm	3.00mm
W3075	0.75X	115	40.00mm	2.00mm
W3100	1.00X	86	30.00mm	1.50mm

Note: The same Auxiliary Lens with different TV lens is just used to adapt to different size image sensor, which will not have much impact on the field of view of the MZO.

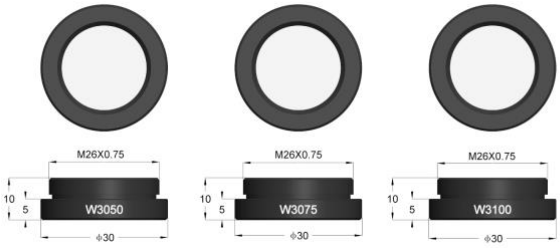

Figure 7-59 The Auxiliary Lens for TZM0880 MZO

7.9.4 TZM0880 MZO's TV Lens

Order number	The maximum compatible sensor size
TV3050	1/3"
TV3075	1/1.8"
TV3100	2/3"

Note: Smaller image sensors can also be used for TV Lens with higher magnification, but in this way, the FOV of MZO will be reduced.

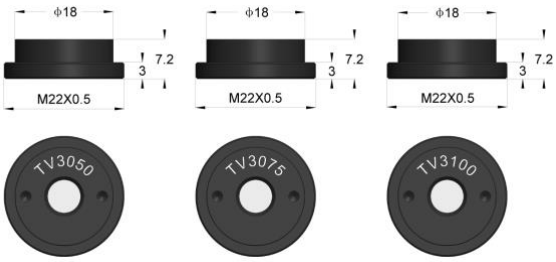

Figure 7-60 TV Lens with different magnification for TZM0880

TOUPTEK PHOTONICS
WE KNOW IMAGES, WE MAKE CAMERAS

7.9.5 TZM0880 MZO's Bracket Adapter

The installation method of the Bracket Adapter (TZM0756A45, TZM0756A50) and bracket is shown below.

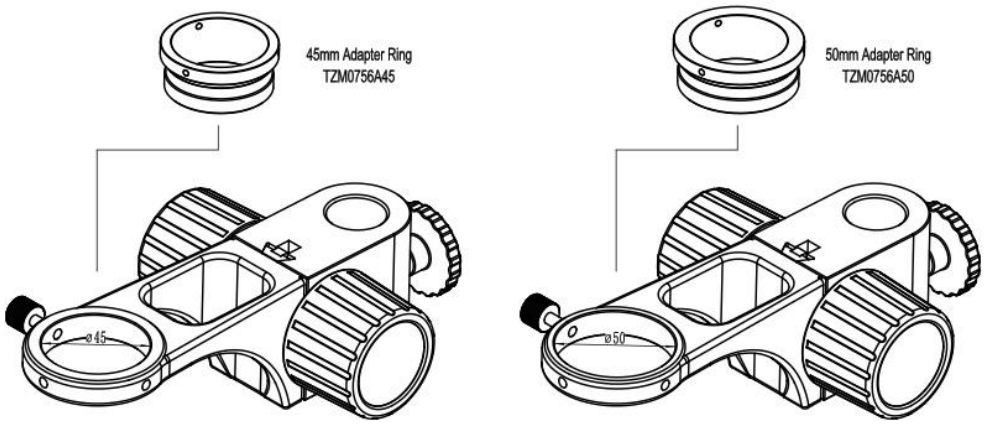

Figure 7-61 TZM0880 MZO's Bracket Adapter

7.9.6 TZM0880 MZO's Optional Module

The Optional Modules include LED Direct Ring Light Module (including LED Direct Ring Light Module and LED Direct Ring Polarization Light Module), Coaxial Light Module (composed of Coaxial Light Adapter and LED Spot Light) and Transmissive Light Module. The currently possible samples are shown in table below.

Module	Order Number	Description
LED Direct Ring Light Module	TZM0756DRL-65，TZM0756DRL-85	LED Direct Ring Light
	TZM0756DRPL-65	LED Direct Ring Polarization Light
Coaxial Light Module	TZM0756CL+TZM0756SL	Coaxial Light Adapter + LED Spot Light
Transmissive Light Module	TZM0756TL	LED Transmissive Light
Power of Light Source	40600014	US:POWER-U-12V1A(Power Adapter American Standard)
	40600015	DE: POWER-E-12V1A(Power Adapter European standard

7.9.7 The Optical Specifications of TZM0880 MZO with Different Auxiliary &TV Lens

The optical specifications of TZM0880 MZO with different Auxiliary Lens and TV Lens are shown in table below. Auxiliary Lens and TV Lens with 1.00x(TZM0880-W3100-TV3100) are listed in the left-up cell. Its data is the basis of the other parameters in the whole table.

Auxiliary Lens	Specification	TV3100 2/3"(D=11mm)		TV3050 1/3"(D=6mm)		TV3075 1/2"(D=8mm)	
W3100 WD 86mm	PMAG	0.80-8.00		0.40-4.00		0.60-6.00	
	DFOV/mm	13.75	1.38	15.00	1.50	13.33	1.33
	NA	0.018	0.112	0.018	0.112	0.018	0.112
W3050 WD 174mm	PMAG	0.40-4.00		0.20-2.00		0.30-3.00	
	DFOV/mm	27.50	2.75	30.00	3.00	26.67	2.67
	NA	0.010	0.056	0.010	0.056	0.010	0.056
W3075 WD 115mm	PMAG	0.60-6.00		0.30-3.00		0.45-4.50	
	DFOV/mm	18.33	1.83	20.00	2.00	17.78	1.78
	NA	0.014	0.084	0.014	0.084	0.014	0.084

WD: Working Distance; PMAG: Primary Magnification; DFOV: Diagonal Field of View in the object side; NA: Numerical Aperture;

Note: Infinity corrected objectives limit system's usable zoom range due to uneven illumination. The maximum sensor size is 2/3".

7.9.8 The Dimension of TZM0880 MZO with Different Light Module

The dimension of TZM0880 series MZO with different Auxiliary Lens and TV Lens is shown below:

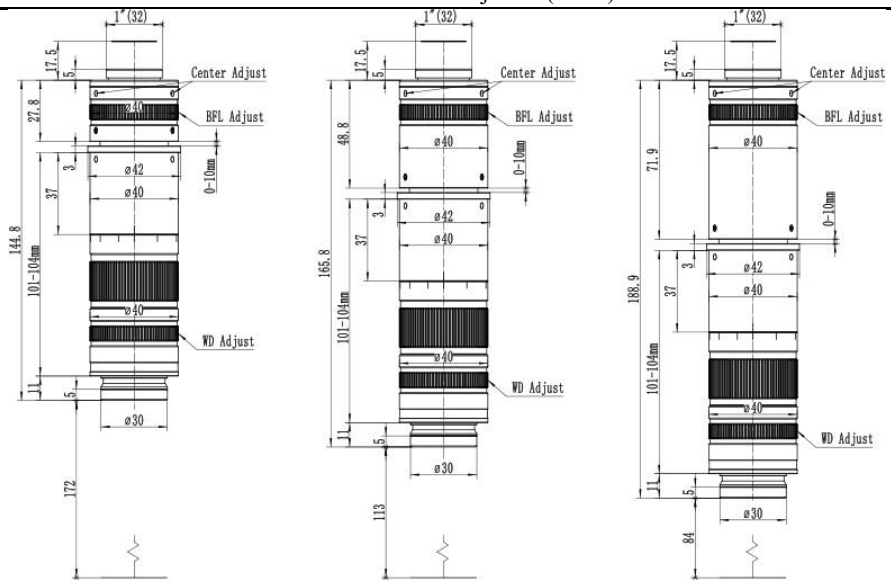

Figure 7-62 Dimension of TZM0880 series MZO with different Auxiliary Lens and TV Lens
a) TZM0880-W3050-TV3050; b) TZM0880-W3075-TV3075 c) TZM0880-W3100-TV3100

The length of the MZO with different TV Lens will be slightly different. The length of TZM0880-W3050-TV3050 is 144.8mm, it is much shorter than most of the MZO in the market.

7.9.9 How to Configure TZM0880 MZO

The corresponding parameters of TZM0880 MZO are listed in below. A specific combination can be determined according to the following steps.

1. Confirm the possible range of 1) DFOV and 2) Working Distance in the object space to choose the Auxiliary Lens.
2. Choose the M26x0.705 to M20x0.705 Objective Adapter, if the M20x0.705 mount infinity objective is used.
3. Confirm the camera Image Area Size, it can be 1) Sensor Size (1/x in inch), 2) Image Diagonal Length, 3) Image Width or 4) Image Height to choose the right TV Lens.
4. Choose the 45mm or 50 mm Bracket Adapter according to the diameter of the bracket hole diameter.
5. Choose the LED Direct Ring Light Module for the reflective illumination.
6. Choose the Coaxial Light Module if coaxial illumination is required.
7. Choose the Transmissive Light Module if transmissive illumination is required.
8. Choose the Camera Module.

We offer a variety of microscope cameras. Customers could get the detailed information of our cameras on the official website (http://www.touptek.com/) and choose the appropriate ones.

The combinations of different the Auxiliary Lens, The Middle Zoom Module and the TV Lens. With this figure, user can configure MZO with different magnification to fit different sensor and different application

Auxiliary Lens-Main Zoom Module-TV Lens	WD(mm)	PMAG	DFOV(mm)	NAO	Camera
TZM0880-W3050-TV3050	174	0.2X-2.0X	30.00-3.00	0.01-0.056	1/3inch
TZM0880-W3075-TV3050	115	0.3X-3.0X	20.00-2.00	0.014-0.084	
TZM0880-W3100-TV3050	86	0.4X-4.0X	15.00-1.50	0.018-0.112	
TZM0880-W3050-TV3075	174	0.3X-3.0X	26.67-2.67	0.01-0.056	1/2inch
TZM0880-W3075-TV3075	115	0.45X-4.5X	17.78-1.78	0.014-0.084	
TZM0880-W3100-TV3075	86	0.6X-6.0X	13.33-1.33	0.018-0.112	
TZM0880-W3050-TV3100	174	0.4X-4.0X	27.5-2.75	0.01-0.056	2/3inch
TZM0880-W3075-TV3100	115	0.6X-6.0X	18.33-1.83	0.014-0.084	
TZM0880-W3100-TV3100	86	0.8X-8.0X	13.75-1.38	0.018-0.112	

7.9.10 TZM0880 MZO's Packing List

The packing information of the TZM0880 MZO is as follows:

Figure 7-63 The TZM0880 main body, including Auxiliary Lens Module, Middle Zoom Module, TV Lens, Camera Adapter Tube and Bracket Adapter

7.9.11 Order List of TZM0880 MZO

7.9.11.1 TZM0880 Function Module Optional Order List

Module	Order number	Quantity	Remarks	Description
Middle Zoom Module	TZM0880			Ordinary Middle Zoom Module
	TZM0880D			Middle Zoom Module with detent
Auxiliary Lens Module	W3050			0.50X Object Lens
	W3075			0.75X Object Lens
	W3100			1.0X Object Lens
	ON-XX			Biological Objective
	ON-YY			Metallographic Objective
	Objective Adapter			M26x0.706 to M20x0.706
TV Lens	TV3050			For 1/3" Sensor
	TV3075			For 1/1.8" Sensor
	TV3100			For 2/3" Sensor
Bracket Adapter	A45			45mm Bracket Adapter
	A50			50mm Bracket Adapter
Coaxial Light Module	TZM0756CL+TZM0756SL			Coaxial Light Adapter + LED Spot Light
LED Direct Ring Light Module	TZM0756DRL-65			LED Direct Ring Light
	TZM0756DRL-85			LED Direct Ring Light
	TZM0756DRPL			LED Direct Ring Polarization Light
Transmissive Light Module	TZM0756TL			LED Transmissive Light
Power of Light Source	40600014			POWER-U-12V1A(American Standard)
	40600015			POWER-E-12V1A(European standard)

7.9.11.2 TZM0880 Monocular Zoom Object Package Order List

	Order number	Quantity	Remarks
Package Name	TZM0880□-W3□□□-TV3□□□-A□□		
	TZM0880□-W3□□□-TV3□□□-A□□		
	TZM0880□-W3□□□-TV3□□□-A□□		
	TZM0880□-W3□□□-TV3□□□-A□□		
	TZM0880□-W3□□□-TV3□□□-A□□		
	TZM0880□-W3□□□-TV3□□□-A□□		
	TZM0880□-W3□□□-TV3□□□-A□□		
	TZM0880□-W3□□□-TV3□□□-A□□		
	TZM0880□-W3□□□-TV3□□□-A□□		
	TZM0880□-W3□□□-TV3□□□-A□□		

TOUPTEK PHOTONICS
WE KNOW IMAGES, WE MAKE CAMERAS

Remarks
Remarks：Users or salesmen can directly write the corresponding module name, number of sets, and other special requirements in the remarks with their own professional knowledge.

7.9.11.3 TZM0880 Order List of Other Accessories

Module	Order number	Quantity	Remarks	Description
Auxiliary Lens Module	W3050			0.50X Object Lens
	W3075			0.75X Object Lens
	W3100			1.0X Object Lens
	ON-XX			Biological Objective
	ON-YY			Metallographic Objective
	Objective Adapter			M26x0.706 to M20x0.706
TV Lens	TV3050			For 1/3" Sensor
	TV3075			For 1/1.8" Sensor
	TV3100			For 2/3" Sensor
Bracket Adapter	A45			45mm Bracket Adapter
	A50			50mm Bracket Adapter
Coaxial Light Module	TZM0756CL+TZM0756SL			Coaxial Light Adapter + LED Spot Light
LED Direct Ring Light Module	TZM0756DRL-65			LED Direct Ring Light
	TZM0756DRL-85			LED Direct Ring Light
	TZM0756DRPL-65			LED Direct Ring Polarization Light
Transmissive Light Module	TZM0756TL			LED Transmissive Light
Power of Light Source	40600014			POWER-U-12V1A(MSA-C1000IC12.0-12H-US), Power Adapter American Standard
	40600015			POWER-E-12V1A(MSA-C10001C12.0-12W-DE), Power Adapter European standard

TOUPTEK PHOTONICS
WE KNOW IMAGES, WE MAKE CAMERAS

8 The Light Source for MZO/AFDM

8.1 Angle Adjustable LED Ring Light AALRL-200-7650

- Twelve 1 watt LED located on a 202 mm circle
- LED intensity controllable with USB port(AFDM series)
- Single LED on/off switch
- Single LED illumination angle adjustable(left or right 30 degree)
- Power input 12V/2A
- Large FOV(300mm diameter)
- Providing intense and focused shadow-free illumination
- For microscope stand with 75mm diameter bracket
- For monocular zoom object /AFDM with 50mm adaptor

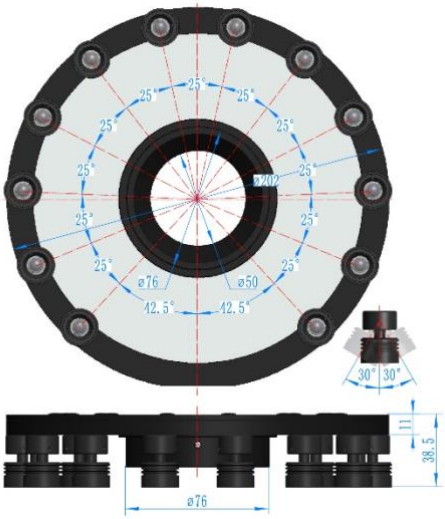

Figure 8-1 Dimension of AALRL-200-7650 Angle Adjustable LED Ring Light

AALRL-200-7650 LED Ring Light is shown in the figure above. Twelve LEDs with individually adjustable angles are distributed on the outer circle with a diameter of 200mm. The mounting column with a diameter of 76mm in the middle can be directly inserted into the microscope bracket hole (such as the A1 bracket of TPS-30A). The diameter of the hole in the mounting column is 50mm, and the single barrel or autofocus microscope of the corresponding adapter can be directly inserted.

Figure 8-2 AALRL-200-7650 under the condition of LED angle, inward and oblique light illumination

TOUPTEK PHOTONICS
WE KNOW IMAGES, WE MAKE CAMERAS

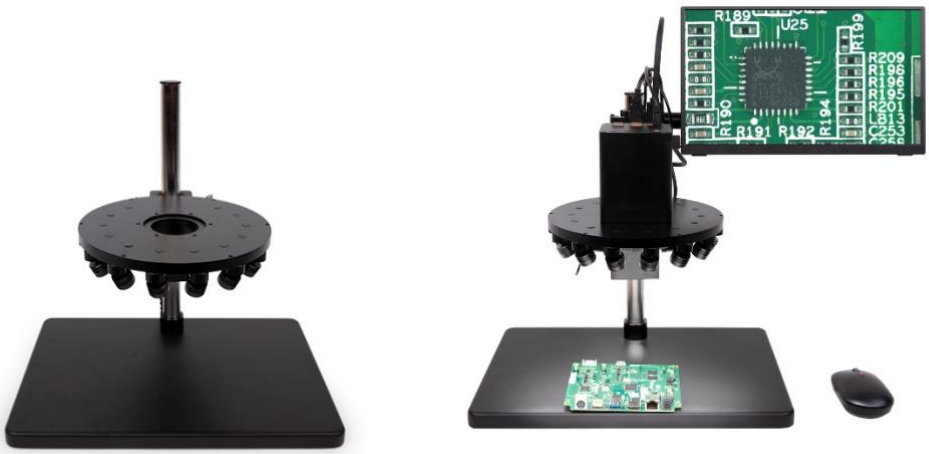

Figure 8-3 TPS-30A+AALRL-200-7650 and TPS-30A+AALRL+AFDM101+SCR

The left figure above shows that AALRL -200-7650 is installed on the microscope bracket of TPS-30A;

The right figure above shows that AALRL -200-7650 is first installed on the microscope bracket of TPS-30A, and then AFDM101 (with 50mm front end diameter) is installed in the mounting hole of AALRL-200-7650.

8.2 The Light Source for TZM0756 MZO

This light source is also suitable for TZM0756, TZM0745A, TZM0480, TZM0460, TZM0440, TZM0660, TZM0640 and TZM0880 MZO.

8.2.1 TZM0756 Series Light Source

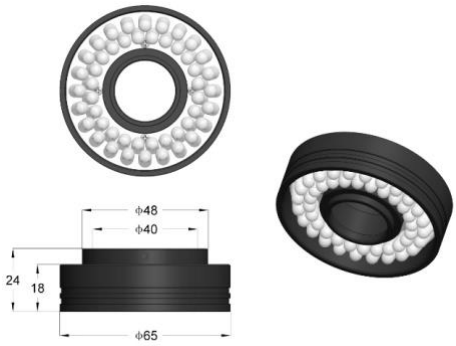

Figure 8-4 TZM0756DRL-65, the maximum diameter of LED reaches 65mm, and the diameter of 40mm in the center can be directly sleeved to the front end of the corresponding MZO to achieve uniform reflection lighting

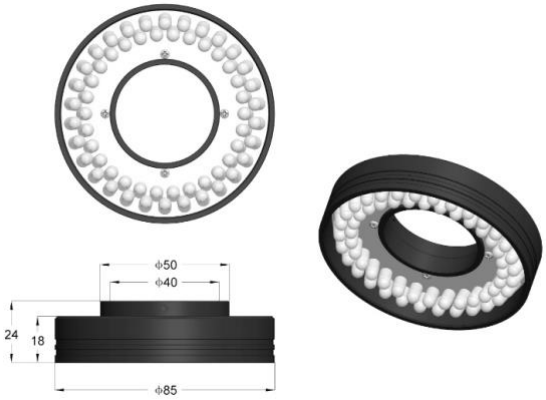

Figure 8-5 TZM0756DRL-85, the maximum diameter of LED reaches 85mm, and the diameter of 40mm in the center can be directly sleeved to the front end of the corresponding MZO to achieve uniform reflection lighting

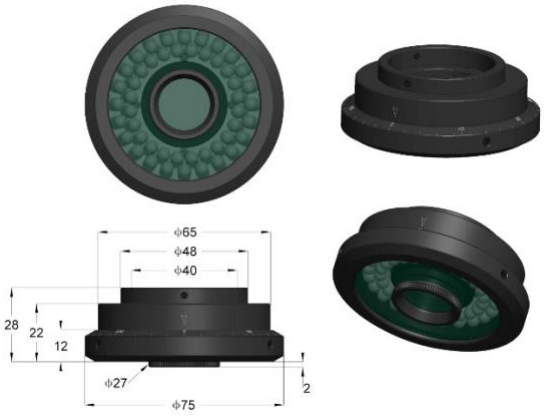

Figure 8-6 TZM0756DRPL-65，the maximum diameter of the LED reaches 65mm, and the small hole with a center diameter of 40mm can be directly sleeved on the front end of the corresponding MZO. By rotating the polarizing plate, uniform illumination of linear polarized light in different directions can be realized

TOUPTEK PHOTONICS
WE KNOW IMAGES, WE MAKE CAMERAS

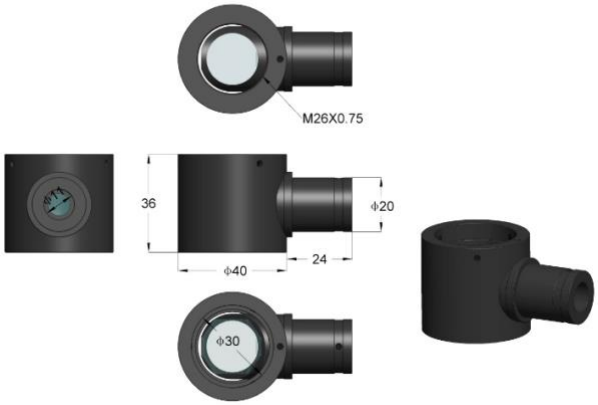

Figure 8-7 TZM0756CL Coaxial Light Adapter with 11mm hole for LED Spot Light

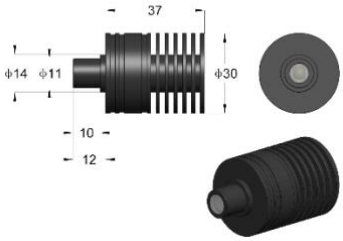

Figure 8-8 TZM0756SL, LED Spot Light can be directly connected with Coaxial Light adapter(TZM0756CL) to realize coaxial light illumination

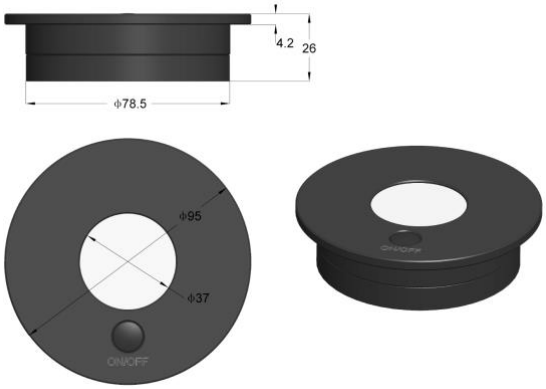

Figure 8-9 TZM0756TL LED Transmission Light source with illumination range of 37mm

8.2.2 TZM0756 Series Light Source Packing Information

The packing information of TZM0756DRL-65/85 is as follows:

TOUPTEK PHOTONICS
WE KNOW IMAGES, WE MAKE CAMERAS

Figure 8-10 TZM0756DRL-65/85, including LED Direct Ring Light and Power Adapter

The packing information of TZM0756DRPL-65 is as follows:

Figure 8-11 TZM0756DRPL-65, including LED Direct Ring Polarization Light and Power Adapter

The packing information of Coaxial Light Module is as follows:

Figure 8-12 TZM0756 Coaxial Light Module, including TZM0756CL (Coaxial Light Adapter), TZM0756SL (LED Spot Light) and Power Adapter

8.3 The Light Source for TZM0745B MZO

The light source is suitable for TZM0745B MZO.

8.3.1 TZM0745B Series Light Source Module

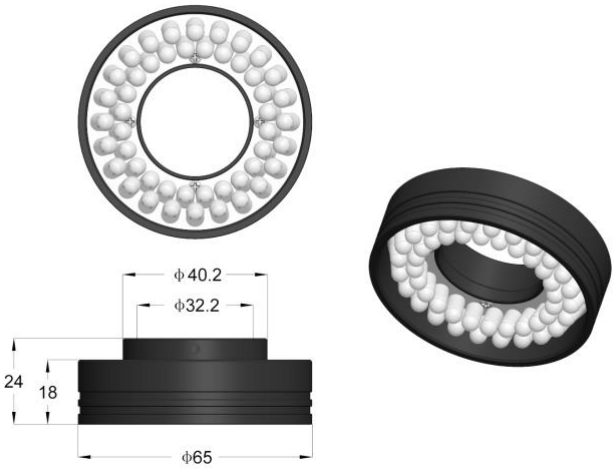

Figure 8-13 TZM0745BDRL-65 LED Direct Ring Light

8.3.2 The Packing Information of Light Source for TZM0745B MZO

Figure 8-14 TZM0745BDRL-65, including LED Direct Ring Light and Power Adapter

TOUPTEK PHOTONICS
WE KNOW IMAGES, WE MAKE CAMERAS

9 Stand for MZO /AFDM

9.1 Bracket for Stand

At present, there are three kinds of bracket available, and users can choose one of them, and then combine it with the base to form their own microscope stand for the monocular zoom microscope. The parameters of the three brackets are listed below

Model	Column Aperture (mm)	Lens Aperture (mm)	Center Distance (mm)	Adjustment Range (mm)	Picture
A1	25	76	150	50	
A4	25	50	140	62	
A5	32	50	150	36	
A20	25	50	165	62	
CFA5025	25	50	150	62	

Figure 9-1 A 1 bracket

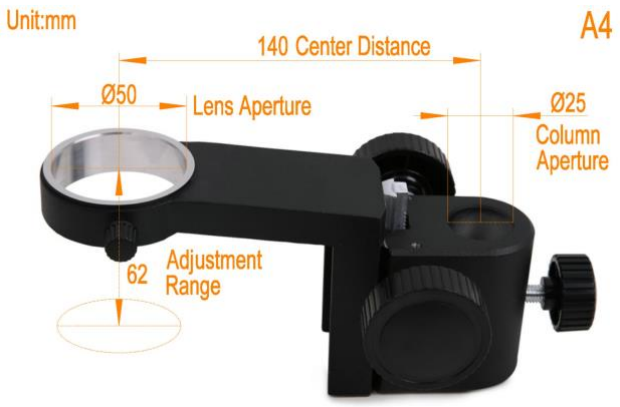

Figure 9-2 A4 bracket

TOUPTEK PHOTONICS
WE KNOW IMAGES, WE MAKE CAMERAS

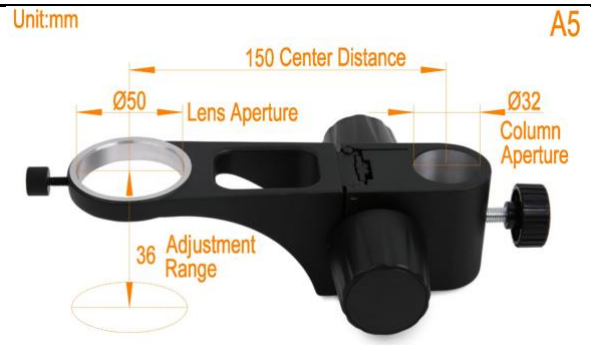

Figure 9-3 A5 bracket

Figure 9-4 A20 bracket

Figure 9-5 CFA5025 bracket with coarse fine adjustment knob

9.2 Base for Stand

At present, there are five kinds of bases to choose, and the user can choose one of them, and then combine it with the bracket to form his own microscope stand for monocular microscope. The parameters of the five bases are listed below. The base with B in the table is only obtained by rotating base with A by 90 degrees.

Model	Base (L x W x H mm)	Column Height(mm)	Column Diameter(mm)
B10	380×248×23	340	25
B11A	320×260×19	295	32
B11B	260×320×19	295	32
B20A	375×250×20	335	25
B20B	250×375×20	335	25
B210			NA

9.3 Microscope Stand

TOUPTEK PHOTONICS
WE KNOW IMAGES, WE MAKE CAMERAS

- The bracket can be freely matched with the base
- Easy large-sized focusing knobs on both sides of focusing holder
- Steel gears on focusing holder.
- Standard size focusing holder - will fit scope heads with diameter of 50mm
- Different size of base
- Suitable for monocular zoom microscope

Model	Bracket	Base
TPS-10A	A4	B10
TPS-20A	A5	B11A
TPS-20B	A5	B11B
TPS-30A	A1	B10
TPS-300A	CFA5025	B10
TPS-200A	A20	B20A
TPS-200B	A20	B20B
TPS-210A50	A50	B210
TPS-210A76	A76	B210

Figure 9-6 TPS-10A

Figure 9-7 TZM0756 monocular zoom microscope, HDMI camera and TPS-10A

Figure 9-8 TPS-20A. TPS-20B can be obtained by rotating base B11A 90 degrees(B11B) and assembling it with bracket A5

Figure 9-9 TZM0756 monocular zoom microscope, HDMI camera and TPS-20A

TOUPTEK PHOTONICS
WE KNOW IMAGES, WE MAKE CAMERAS

Figure 9-10 TPS-30A(A1+B10)

Figure 9-11 AFDM101 auto-focus digital microscope +TPS30A

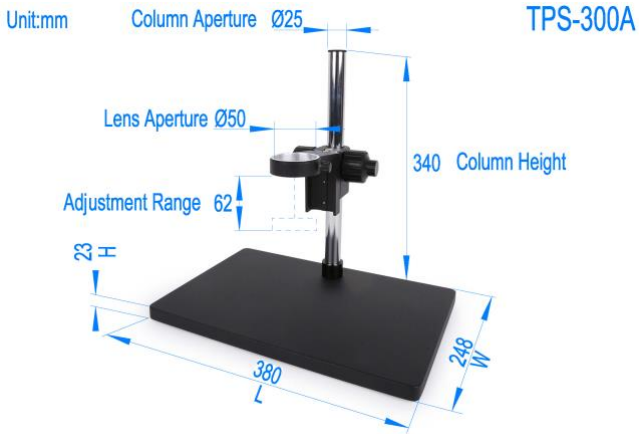

Figure 9-12 TPS-300A(CFA5025+B10)

Figure 9-13 TPS300A+TZM0480+USB Camera

Figure 9-14 TPS-200A. TPS-200B can be obtained by rotating base B20A 90 degrees(B20B) and assembling it with bracket A20

Figure 9-15 TZM0756 monocular zoom microscope, HDMI camera and TPS-200A

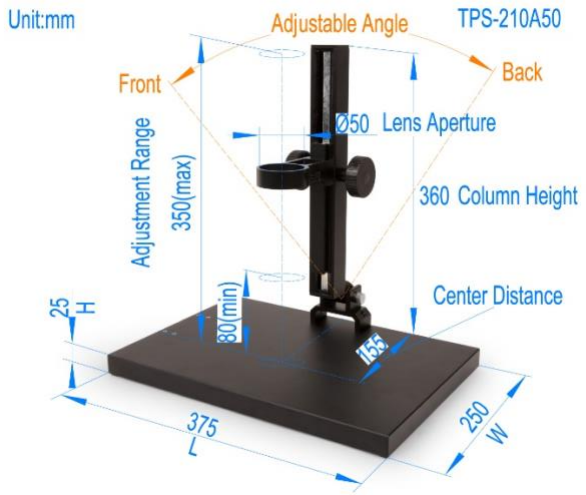

Figure 9-16 TPS-210A50

Figure 9-17 TPS-210A50-G+ZM0480H1080PA+SCR

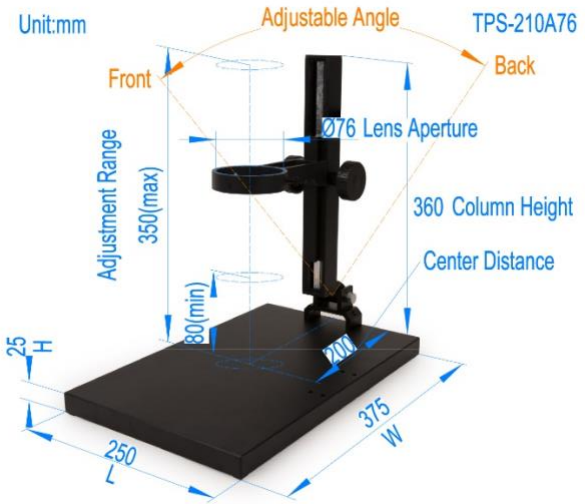

Figure 9-18 TPS-210A76-G1

Figure 9-19 TPS-210A76-G+AFDM101
+DRL-5076A-NPC+SCR

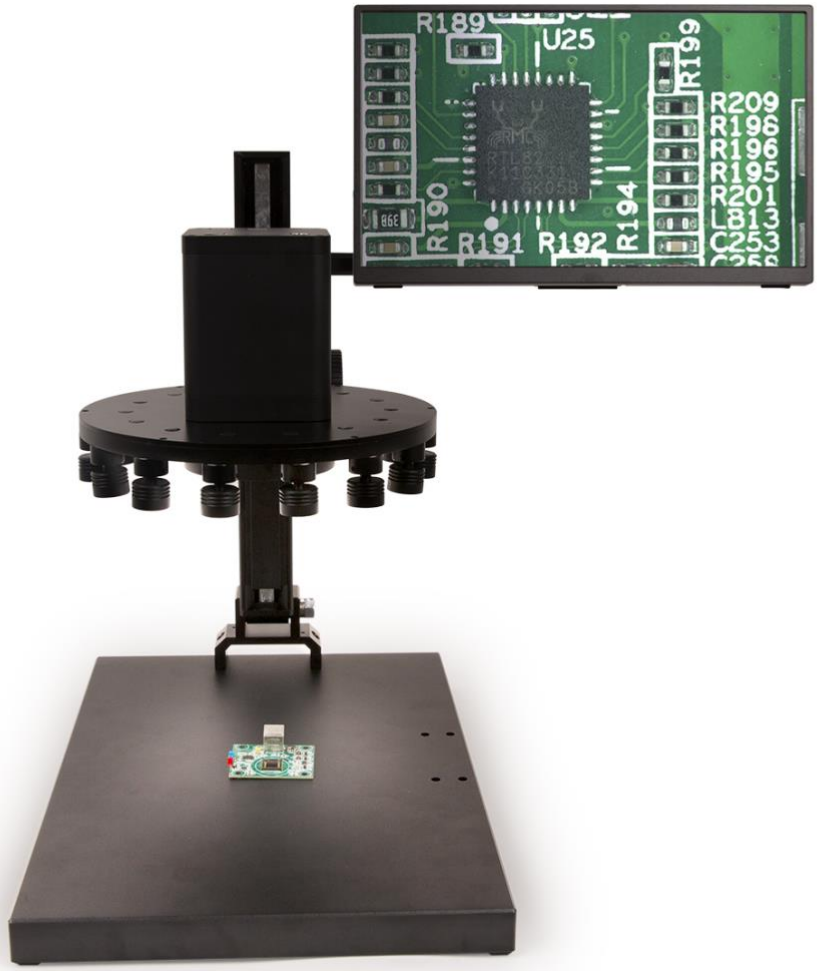

Figure 9-20 TPS-210A76-G+AFDM101+AALRL-200-7650+SCR

9.4 TPS-600 Series Stand with Different Bracket

Model	Bracket	Base
TPS-600-CFA50 TPS-600-CFA50-G	CFA50(focusing with Course and Fine knobs and 50mm Adapter)	TPS-600(380*250*10mm)
TPS-600-CFA76 TPS-600-CFA76-G	CFA76(focusing with Course and Fine knobs and 76mm Adapter))	TPS-600(380*250*10mm)
TPS-600-CFAMF TPS-600-CFAMF-G	CFAMF(focusing with Course and Fine knobs and Multi- Function Adapter))	TPS-600(380*250*10mm)
TPS-600B-CFA50	CFA50(focusing with Course and Fine knobs and 50mm Adapter	TPS-600B(160*250*10mm)

G: Stand with cross bar

Figure 9-21

图 9-1 CFA50，CFA76, CFAMF brackets with different adapters

Figure 9-22 TPS-600-CFA50

TOUPTEK PHOTONICS
WE KNOW IMAGES, WE MAKE CAMERAS

Figure 9-23 TPS-600-CFA50-G(with cross bar)

Figure 9-24 TPS-600-CFA76(with cross bar)

Figure 9-25 TPS-600-CFA76-G(with cross bar)

Figure 9-26 TPS-600-CFAMF

Figure 9-27 TPS-600-CFAMF-G(with cross bar)

Figure 9-28 TPSB-600-CFA50

10 Portable Digital Microscope

10.1 TSCOPE Portable USB Microscope

10.1.1 PUM's Basic Characteristics

The TSCOPE portable USB microscope is an easy to use, high power scope. With continuous powers from 10x to 280x, it's ideal for viewing stamps, coins, bugs, plants, rocks, skin, gems, circuit boards, and more. With the higher power magnifications, you can even view traditional microscope slides under transmitted illumination.

Best of all, you can capture your discoveries using the built-in 2.0MP camera. Press the shutter to save images and high-resolution video directly to your PC. The LED illuminator ensures your specimens are clear and bright. An included metal stand allows for steady shots and comes in handy when viewing at higher powers, minimizing shaking and keeping your specimen in sharp focus.

For teens and adults alike, the TSCOPE portable USB microscope is a fun, educational tool. It's well suited for hobbyists, quality control inspectors, medical professionals, and scientific researchers.

The basic characteristics of PUM are:

- USB powered handheld digital microscope with continuous 10x to 280x magnification;
- Object distance-controlled zoom property;
- Single object distance, single magnification;
- Linear rotation magnification relationship;
- Object distance from 110 to 10 mm corresponding to 10x to 280x magnification;
- 5G high grade optical glass with multi-layer anti-reflection coating;
- Built-in 2MP(1920x1080) digital camera for capturing images and videos;
- 8 LED ring illuminator with adjustable illumination;
- Use the included Windows software to capture images and videos of your discoveries. Measure your specimens with built-in measurement tool;
- Computer requirements: CD/DVD drive and USB 2.0 port. UVC plug-and-play with Microsoft® Windows® XP / Vista / 7 / 8 /10 /11 (32 & 64 bit), OSx(Mac OS X) and Linux.

Figure 10-1 TSCOPE PUM Series Portable USB Microscope

10.1.2 PUM's Hardware Specification (7)

Order Code	Optcial Lens	Sensor	Size(mm)	Sensitivity Dark Signal	FPS/Resolution	Binning	Exposure
PUM01300KPA	HH153	1.3M/IMX307(C) 1/2.8"(4.41x2.48)	2.9 x2.9	1300mv with 1/30s 0.15mv with 1/30s	38@1520x856 38@760x428	1x1 1x1	0.1-2000 ms
PUM02000KPA	HH153	2.0M/IMX290(C) 1/2.8"(5.56x3.13)	2.9 x2.9	1300mv with 1/30s 0.15mv with 1/30s	17@1920x1080	1x1	0.105ms~15s
PUM02100KPA	HH153	2.1M/IMX307(C) 1/2.8"(5.56x3.13)	2.9 x2.9	1300mv with 1/30s 0.15mv with 1/30s	38@1920x1080 38@960x540	1x1 1x1	0.1-2000 ms
PUM05100KPA	HH153	5.1M/IMX335(C) 1/2.8" (5.18x3.89)	2.0x2.0	505mv with 1/30s 0.13mv with 1/30s	26@2592x1944 26@1280x960 26@640x480	1x1 1x1 1x1	0.1-2000 ms
PUM05100KPA-P	HH153	5.1M/IMX335(C) 1/2.8" (5.18x3.89)	2.0x2.0	505mv with 1/30s 0.13mv with 1/30s	26@2592x1944 26@1280x960 26@640x480	1x1 1x1 1x1	0.1-2000 ms
PUM08300KPA	HH153	8.3M/IMX415(C) 1/2.8" (5.57x3.13)	1.45x1.45	300mv with 1/30s 0.13mv with 1/30s	30@3840x2160 30@1920x1080 30@1280x720 30@960x540	1x1 1x1 1x1 1x1	0.1~2000ms
PUM08300KPA-P	HH153	8.3M/IMX415(C) 1/2.8" (5.57x3.13)	1.45x1.45	300mv with 1/30s 0.13mv with 1/30s	30@3840x2160 30@1920x1080 30@1280x720 30@960x540	1x1 1x1 1x1 1x1	0.1~2000ms

C: Color; M: Monochrome; P: Polarization;

Hardware Function	
Spectral Range	380-650nm (with IR-cut Filter)
White Balance	Auto White Balance
Color Technique	Ultra-Fine Color Engine
Capture/Control SDK	Windows/Linux/macOS/Android Multiple Platform SDK(Native C/C++, C#/VB.NET, Python, Java, DirectShow, Twain, etc)
Recording System	Still Picture and Movie
Cooling System*	Natural
Operating Environment	
Operating Temperature (in Centidegree)	-10~ 50
Storage Temperature (in Centidegree)	-20~ 60
Operating Humidity	30~80%RH
Storage Humidity	10~60%RH
Power Supply	DC 5V over PC USB Port
Software Environment	
Operating System	Microsoft® Windows® XP / Vista / 7 / 8 /10 /11 (32 & 64 bit) OSx(Mac OS X) Linux
PC Requirements	CPU: Equal to Intel Core2 2.8GHz or Higher
	Memory:2GB or More
	USB Port: USB2.0 High-speed Port
	Display:17" or Larger
	CD-ROM

10.1.3 HH153 Optical Specification for PUM

HH153 Optical Specification for PUM	
Optical Lens	5G High Grade Optical Glass with Multi-layer Anti-reflection Coating
Optical Magnification	0.1x~3.3x(33x)
Working Distance	10mm~110mm
Illumination	8 LEDs Illumination
Stand	M-SD-HM5 with Φ41mm Holding Ring

Magnification, Working Distance and Field of View

Magnification	Work Distance	Field of View(X) mm	Field of View(Y) mm
10	134.63	48.09	27.07
20	73.65	24.05	13.54
30	50.85	16.03	9.02
40	40.39	12.02	6.77
50	33.51	9.62	5.41
60	29.30	8.02	4.51
70	26.02	6.87	3.87
80	23.76	6.01	3.38
90	21.84	5.34	3.01
100	20.32	4.81	2.71
110	19.18	4.37	2.46
120	18.14	4.01	2.26
130	17.33	3.70	2.08
140	16.58	3.44	1.93
150	15.97	3.21	1.80
160	15.40	3.01	1.69
170	14.90	2.83	1.59
180	14.49	2.67	1.50
190	14.09	2.53	1.42
200	13.75	2.40	1.35
210	13.43	2.29	1.29
220	13.15	2.19	1.23
230	12.88	2.09	1.18
240	12.65	2.00	1.13
250	12.42	1.92	1.08
260	12.21	1.85	1.04
270	12.03	1.78	1.00
280	11.85	1.72	0.97

10.1.4 Accessary for PUM

M-SD-HM5 stand with Φ41mm holding ring (See Section 11.5 for details).

10.1.5 Packing Information for PUM

Packing Information of PUM Series Microscope

Standard Camera Packing List	
A	Carton L:45cm W:45cm H:48cm (20pcs, 17Kg/ carton), not shown in the photo
B	Gift box: L:22cm W:22cm H: 9cm (0.8Kg/box)
C	PUM series microscope
D	CD (Driver & utilities software, Ø12cm)

10.1.6 Sample Images Captured with PUM51000KPA-153

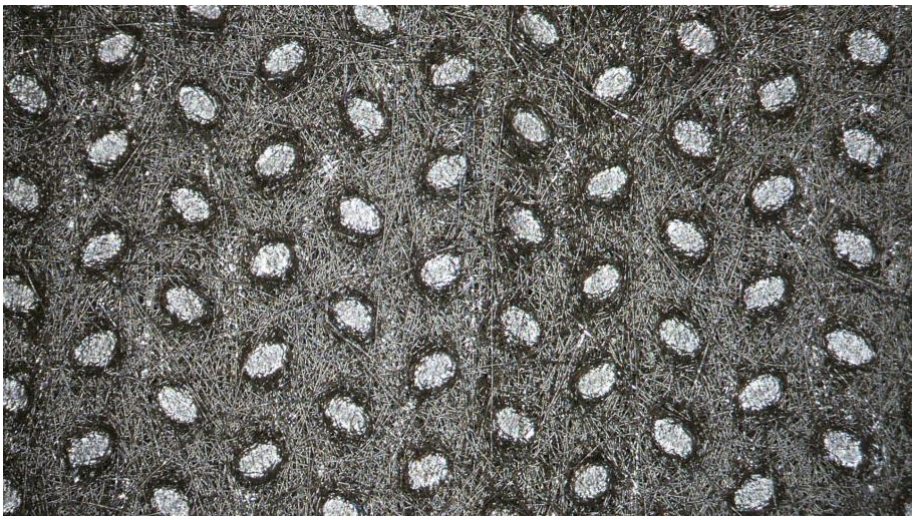

Figure 10-2 Black Textile

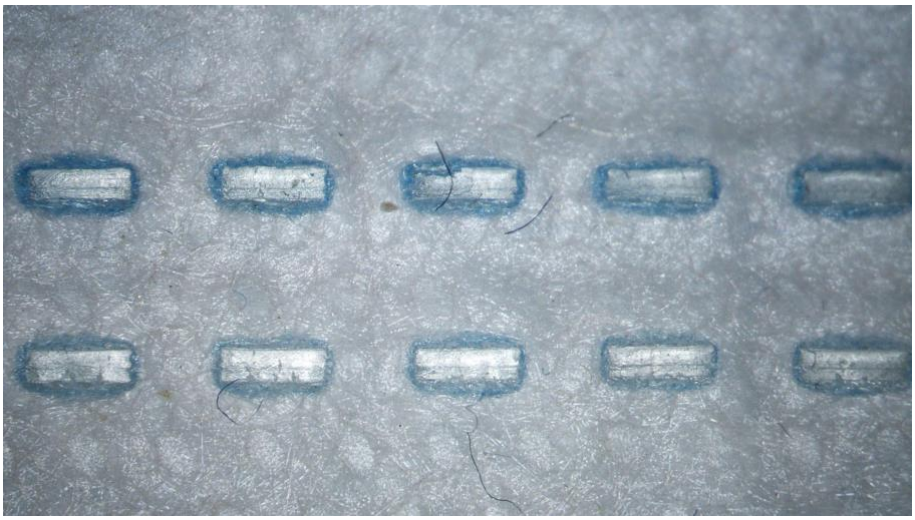

Figure 10-3 Face Mask Fabric

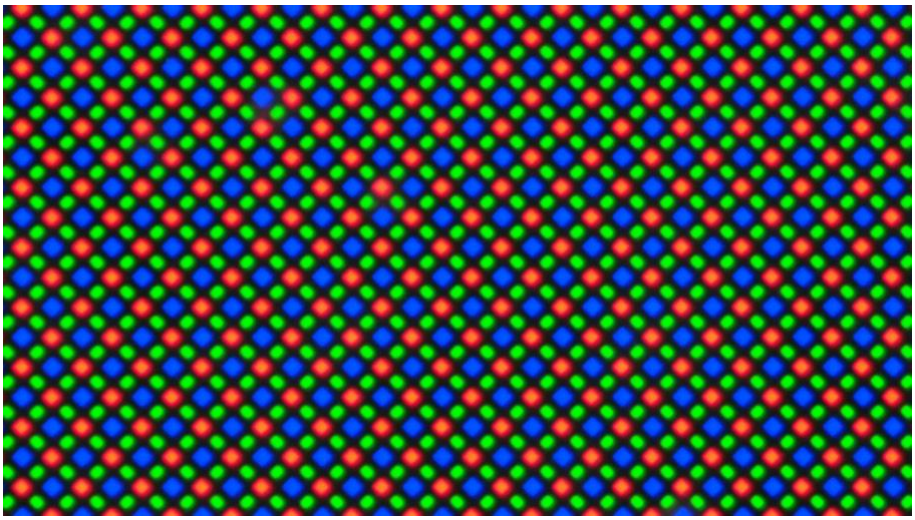

Figure 10-4 IPhone Pixels

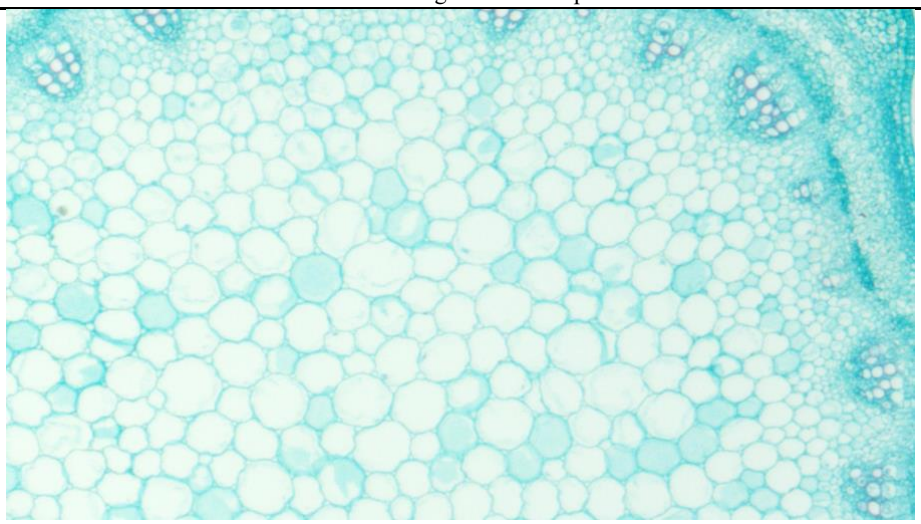

Figure 10-5 Alfalfa Stem(CS)

Figure 10-6 House Fly Wing

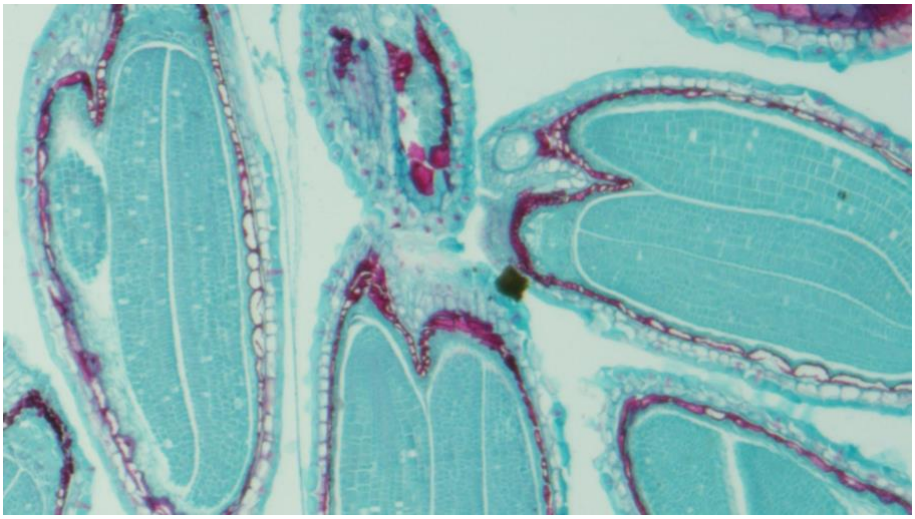

Figure 10-7 Mature Embryo of Capsella

TOUPTEK PHOTONICS
WE KNOW IMAGES, WE MAKE CAMERAS

10.2 ZOPE Series Continuous Zoom Digital Microscope

10.2.1 The Basic Characteristic of ZOPE

- The ZOPE stays in focus when magnification/focal length is changed;
- True continuous zoom that most of the handheld USB microscopes do not have;
- Digital microscope with USB2.0 to computer or HDMI interface to HDMI display;
- Compact and professional optical performance;
- With compact inner 8 high power LEDS for the reflective illumination and uniform LED transmission illumination with battery as the power;
- Long and fixed working distance up to 70mm for all zoom positions;
- CNC mechanical body ensure smooth zooming operation;
- Wide range of resolutions from 1.2M~5M;
- Ultra-Fine color engine with perfect color reproduction capability;
- With advanced video & image processing application ToupView/ToupLite;
- Providing Windows/Linux/Mac OS multiple platforms SDK;
- Native C/C++, C#/VB.NET, DirectShow, Twain Control API;
- USB Power, no extra source required;

With Transmission Illumination

With EPI Illumination On

TOUPTEK PHOTONICS
WE KNOW IMAGES, WE MAKE CAMERAS

10.2.2 ZOPE Series Digital Microscope Module List

The ZOPE series digital microscope is a combination of Zoom Lens and USB Camera. Customers can choose their interested parts and ToupTek engineers will install them into a ZOPE digital microscope.

Order Code	Zoom Lens	Camera Module
ZOPEA05100KPA ZPA605100A	ZLA 0.25X~1.6X (continues and parfocal)	X05100KPA(5M pixels CMOS camera)
ZOPEA01200KPA ZPA601200A	ZLA 0.25X~1.6X (continues and parfocal)	X01200KPA(1.2M pixels CMOS camera)
ZOPEB05100KPA ZPB605100A	ZLB 0.7X~5.6X(continues and parfocal)	X05100KPA(5M pixels CMOS camera)
ZOPEB01200KPA ZPB601200A	ZLB 0.7X~5.6X(continues and parfocal)	X01200KPA(1.2M pixels CMOS camera)

ZLA: A type zoom lens with 0.25X~1.6X magnification;
ZLB: B type zoom lens with 0.7X~5.6X magnification;

10.2.3 Zoom Lens for ZOPE Series Digital Microscope

Currently ToupTek has 2 kinds of zoom lens for option, they are ZLA and ZLB. Customer can choose the right one according to their applications.

Model / Specification	ZLA	ZLB
Zoom Lens	0.25X~1.6X (continues and parfocal)	0.7X~5.6X(continues and parfocal)
Working Distance	67.85mm(From lens to object surface)	31.73(from lens to object surface)
MTF	Diffraction limited	Diffraction limited
Field	Φ28.8~4.5mm	Φ10.85~1.36mm
Reflection Illumination(USB power supply)	8 LEDs embedded illumination(adjustable)	8 LEDs embedded illumination(adjustable)
Transmission Illumination (Battery power, Optional)	Uniform illumination(3 levels switchable)	Uniform illumination(3 levels switchable)

10.2.4 Camera Modules for ZOPE Series Digital Microscope

Currently ToupTek has 2 kinds of camera modules for the Zoom Lens, they are X05100KPA and X01200KPA. ToupTek will continue to enrich the camera modules according to the requirements.

Order Code	Sensor & Size(mm)	Pixel(μm)	G Responsivity Dynamic range SNRmax	FPS/Resolution	Binning	Exposure(ms)
X05100KPA	5.1M/MT9P001(C) 1/2.5“ (5.7x4.28)	2.2x2.2	0.53 V/lux-sec 66.5dB 40.5dB	5@2592x1944 18@1280x960 60@640x480	1x1, 2x2, 4x4	0.294ms~2000ms
X01200KPA	1.2M/AR0130(M) 1/3“(4.8x3.6)	3.75 x3.75	6.5v/lux-sec 85.3dB 44dB	28@1280x960 30@640x480	1x1, 2x2	0.4ms~2000ms

C: Color; M: Monochrome;

Other Specification for UCMOS Camera	
Spectral Range	380-650nm (with IR-cut Filter)
White Balance	ROI White Balance/ Manual Temp Tint Adjustment/NA for Monochromatic Sensor
Color Technique	Ultra-Fine Color Engine/NA for Monochromatic Sensor
Capture/Control SDK	Windows/Linux/macOS/Android Multiple Platform SDK(Native C/C++, C#/VB.NET, Python, Java, DirectShow, Twain, etc)
Recording System	Still Picture and Movie
Cooling System*	Natural
Operating Environment	
Operating Temperature(in Centidegree)	-10~ 50
Storage Temperature(in Centidegree)	-20~ 60
Operating Humidity	30~80%RH
Storage Humidity	10~60%RH
Power Supply	DC 5V over PC USB Port
Software Environment	
Operating System	Microsoft® Windows® XP / Vista / 7 / 8 /10 /11 (32 & 64 bit) OSx(Mac OS X) Linux
PC Requirements	CPU: Equal to Intel Core2 2.8GHz or Higher
	Memory:2GB or More
	USB Port:USB2.0 High-speed Port
	Display:17” or Larger
	CD-ROM

10.2.5 Dimension of ZOPE

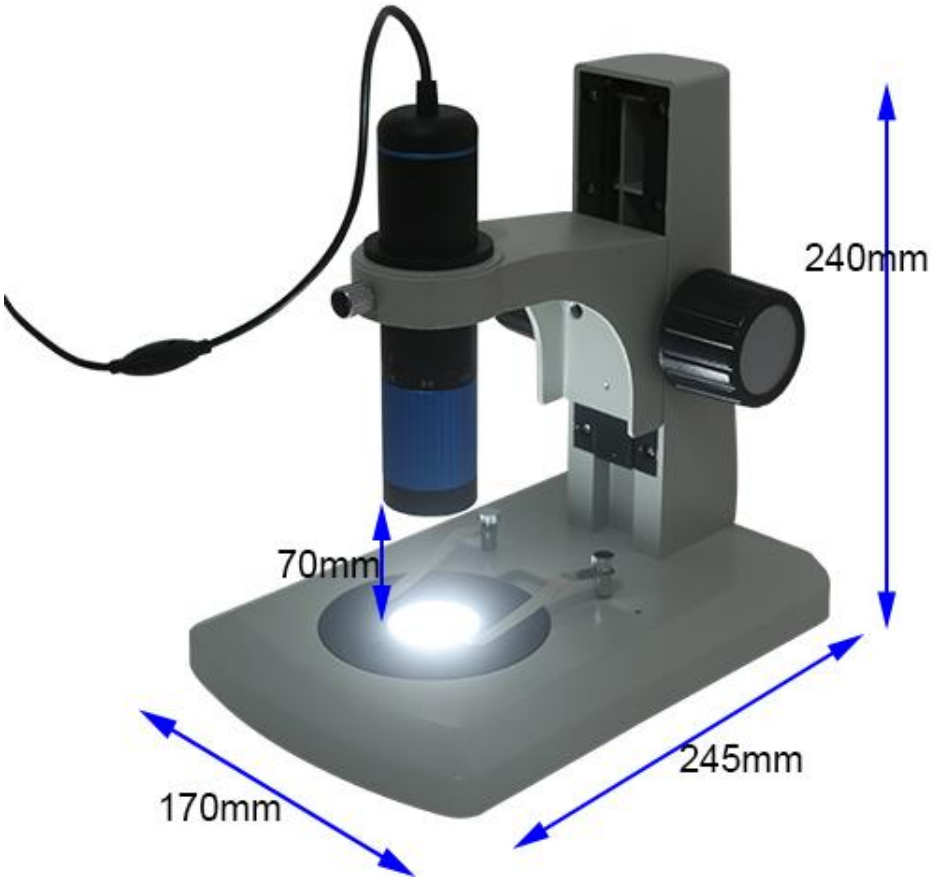

Dimension of ZOPE

TOUPTEK PHOTONICS
WE KNOW IMAGES, WE MAKE CAMERAS

10.2.6 Packing Information for ZOPE Series Digital Microscope

Standard Packing List		
A	Carton L:51cm W:31.5cm H:18cm (1pcs, 2.8Kg/ carton, 0.029m^3), not shown in the photo	
B	ZOPE series digital microscope	
C	Solid stand	
D	Hexwrench to install the stand	
E	CD (Driver & utilities software, Ø12cm)	
Optional Accessory		
F	Uniform transmissive illumination kit(3 Battery power supply, 3 levels switchable)	
G	Calibration kit	106011/TS-M1(X=0.01mm/100Div.); 106012/TS-M2(X,Y=0.01mm/100Div.); 106013/TS-M7(X=0.01mm/100Div., 0.10mm/100Div.)

TOUPTEK PHOTONICS
WE KNOW IMAGES, WE MAKE CAMERAS

10.3 HCAM Series Potable USB2.0 Microscope

10.3.1 HCAM's Basic Characteristic

The intermediate-level HCAM series potable USB2.0 microscope is an easy to use, low power microscope. With powers of 10x to 200x in nonlinear mode, it's ideal for viewing stamps, coins, bugs, plants, rocks, skin, gems, circuit boards, and more. With the higher power magnifications, you can even view traditional microscope slides.

Best of all, you can capture your discoveries using the built-in 0.35MP， 1.3MP or 2.0 MP camera(KPA series) or 0.35MP,1.3MP, 2.0MP, 3.0MP or 5MP camera(KPB series). Press the shutter to save images and high-resolution video directly to your PC. The LED illuminator ensures your specimens are clear and bright. An included metal stand allows for steady shots and comes in handy when viewing at higher powers, minimizing shaking and keeping your specimen in sharp focus.

For teens and adults alike, the ToupTek Handheld Digital Microscope is a fun, educational tool. It's well suited for hobbyists, quality control inspectors, medical professionals, and scientific researchers.

The basic characteristics of HCAM are:

- USB-powered handheld digital microscope with 10x to 200x magnification in nonlinear mode;
- Built-in 0.35MP, 1.3MP or 2MP digital camera for capturing image and video (KPA);
- Built-in 0.35MP, 1.3MP, 2MP, 3MP or 5MP digital camera for capturing image and video (KPB);
- 8 LED ring illuminator;
- Use the included Windows software to capture images and video of your discoveries. Measure your specimens with built-in measurement tool;
- Computer requirements: CD/DVD drive and USB 2.0 port. UVC plug-and-play with Windows 7/8/10, Vista, and XP (32/64 bit).

Figure 10-8HCAM KPA Series Portable USB Microscope

TOUPTEK PHOTONICS
WE KNOW IMAGES, WE MAKE CAMERAS

Figure 10-9 HCAM KPB Series Portable USB Microscope

10.3.2 Specification of HCAM Series Portable USB Microscope

10.3.2.1 HCAM KPA Series

Order Code	Sensor	Size(mm)	Pixel(µm)	FPS/Resolution	Binning	Exposure
HCAM02000KPA HC502000A	MI2010(C)	1/3.2”	2.8x2.8	28 @ 1920 x1080 28@1280x 720 30@640x 480	1x1	0.5ms~30ms
HCAM01300KPA HC501300A	MT9M112(C)	1/4”	2.8x2.8	15@1280x1024 30@640x512	1x1	0.5ms~30ms
HCAM00350KPA HC500350A	GC0308(C)	1/6.5”	3.4x3.4	30@640x480 30@320x240	1x1	0.5ms~30ms

C: Color; M: Monochrome;

10.3.2.2 HCAM KPB Series

Order Code	Sensor	Size(mm)	Pixel(µm)	FPS/Resolution	Binning	Exposure
HCAM00350KPB H500350B	BF3A03(C)	1/6.5”	3.15x3.15	20@640x480 20@320x240	1x1	8ms-125ms
HCAM01300KPB HC01300B	PAS5130(C)	1/3	3.75x3.75	30@1280x960 30@1280x720 30@640x480	1x1	8ms-125ms
HCAM02000KPB HC502000B	PS5230(C)	1/2.7”	3.0x3.0	27@1920x1080 27@1280x720 30@640x480	1x1	8ms-125ms
HCAM03000KPB HC503000B	SC5234S(C)	1/3.2”	1.998x1.998	25@2048x1536 25@1920x1080 25@1280x960 25@1024x768	1x1	3.9ms-1000ms
HCAM05000KPB HC05000B	SC5235S(C)	1/2.7”	1.998x1.998	20@2592x1944 20@2048x1536 25@1920x1080 25@1280x960 25@1024x768	1x1	3.9ms-1000ms

C: Color; M: Monochrome;

Working Distance and Magnification for HCAM KPB Series

HCAM00300KPB Resolution 640*480

Magnification	10	20	30	40	50	60	70	80	90	100	110	120	130	140	150	160	165		
Working Distance(mm)	90	31.6	12.5	4.5	0.3	-1.8	-2.8	-3	-2.8	-2.3	-1.4	-0.5	0.6	1.7	3	4.5	5.4		
Field（X）mm	16	8	5.33	4	3.2	2.67	2.29	2	1.78	1.6	1.46	1.33	1.23	1.14	1.07	1	0.97		
Field（Y）mm	12	6	4	3	2.4	2	1.72	1.5	1.33	1.2	1.1	1	0.92	0.86	0.8	0.75	0.73		

HCAM01300KPB Resolution 1280*960

Magnification	17	20	30	40	50	60	70	80	90	100	110	120	130	140	150	160			
Working Distance(mm)	33.6	24.4	9.3	2.8	-0.3	-1.5	-1.7	-1.3	-0.4	0.7	2.1	3.2	4.8	6.8	8.6	10			
Field（X）mm	18.8	16	10.7	8	6.4	5.33	4.57	4	3.56	3.2	2.9	2.67	2.46	2.29	2.13	2			
Field（Y）mm	14.1	12	8	6	4.8	4	3.43	3	2.67	2.4	2.18	2	1.85	1.72	1.6	1.5			

HCAM02000KPB Resolution 1920*1080

Magnification	20	30	40	50	60	70	80	90	100	120	140	160	170	180	190	195			
Working Distance(mm)	36	15.8	6.5	2.2	0	-1.5	-2	-1.9	-1.4	0.2	1.9	4.2	5.7	7.1	8.4	9.6			
Field（X）mm	24	16	12	9.6	8	6.86	6	5.33	4.8	4	3.43	3	2.82	2.67	2.53	2.46			
Field（Y）mm	13.5	9	7.75	5.4	4.5	3.86	3.38	3	2.7	2.25	1.93	1.69	1.59	1.5	1.42	1.38			

HCAM03000KPB Resolution 2048*1536

Magnification	24	30	40	50	60	70	80	90	100	120	140	160	180	200	220	230			
Working Distance(mm)	36	24	12	6	2.5	0.5	-0.6	-1.2	-1.3	-0.8	0.4	2.4	4.4	6.6	8.9	10			
Field（X）mm	21.2	16.8	12.6	10.1	8.4	7.2	6.3	5.6	5.05	4.2	3.6	3.15	2.8	2.53	2.3	2.2			
Field（Y）mm	15.9	12.6	9.45	7.58	6.3	5.4	4.73	4.2	3.79	3.15	2.7	2.36	2.1	1.9	1.73	1.65			

HCAM05000KPB Resolution 2592*1944

Magnification	33	40	50	60	70	80	90	100	120	140	160	180	200	220	230	240	260	280	290
Working Distance(mm)	30.2	21	12	7	3.4	1.3	0.2	-1	-1.8	-1.7	-0.9	0.2	1.8	3	3.9	4.6	6.4	8.5	9.4
Field（X）mm	19.4	16.2	12.8	10.8	9.3	8	7.2	6.4	5.4	4.6	4.1	3.6	3.2	2.9	2.8	2.7	2.5	2.3	2.2
Field（Y）mm	14.6	12.2	9.6	8.1	7	6	5.4	4.8	4.05	3.45	3.08	2.7	2.4	2.18	2.1	2.02	1.88	1.73	1.65

The magnifications are measured with 22"(558.8mm) displayer

Optical Specification for HCAM Camera	
Optical Lens	5G High Grade Optical Glass with Multi-layer Anti-reflection Coating(KPB)
Optical Magnification	0.1x~3.3x(33x)
Working Distance	See table of Working Distance and Magnification for HCAM KPB Series
Illumination	8 LEDs Illumination
Stand	M-SD-HM1, M-SD-HM2 or M-SD-HM3 for KPA Series M-SD-HM4 with *Φ33*mm Holding Ring for KPB Series)
Other Specification for HCAM Camera	
Spectral Range	380-650nm (with IR-cut Filter)
White Balance	Auto White Balance
Color Technique	N/A
Capture/Control SDK	Standard UVC for Windows(USB2.0)
Recording System	Still Picture and Movie
Cooling System*	Natural
Operating Environment	
Operating Temperature(in Centidegree)	-10~ 50
Storage Temperature(in Centidegree)	-20~ 60
Operating Humidity	30~80%RH
Storage Humidity	10~60%RH
Power Supply	DC 5V over PC USB Port
Software Environment	
Operating System	Microsoft® Windows® XP / Vista / 7 / 8 /10 /11 (32 & 64 bit) OSx(Mac OS X) Linux

PC Requirements	CPU: Equal to Intel Core2 2.8GHz or Higher
	Memory:2GB or More
	USB Port: USB2.0 High-speed Port
	Display:17” or Larger
	CD-ROM

10.3.3 Accessory for HCAM Series Portable USB Microscope

M-SD-HM1, M-SD-HM3, M-SD-HM3 for HCAM KPA series portable USB microscope;

M-SD-HM4 for HCAM KPB series portable USB microscope;

11 Stands for the Potable Microscope

11.1 M-SD-HM1 Potable Microscope Stand

Pole stand (Metal) for potable microscope with focus mount has the following basic characteristic

- Oxidized silver aluminum alloy;
- Stable to ensure capturing the clear video and image;
- Overall dimensions：150mmX80mmX147mm;
- Plate dimensions: 150mmX80mm;
- Pole coaxial focus with 51mm range;

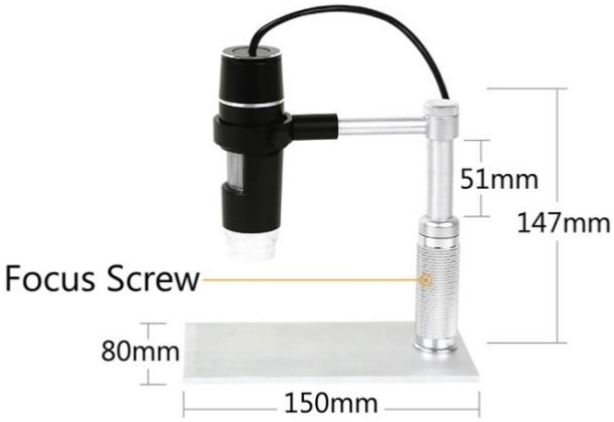

TOUPTEK PHOTONICS
WE KNOW IMAGES, WE MAKE CAMERAS

11.2 M-SD-HM2 Potable Microscope Stand

The track stand (Metal) for potable microscope with focus mount has the following basic characteristic:

- Oxidized silver aluminum alloy;
- Focus knob inherited from the traditional microscope to focus at ease;
- Silicon rubber ring to protect the potable microscope;
- Holding screw to hold the microscope;
- Stable to ensure capturing the clear video and image;
- Overall dimensions: 150mm x 80mm x135mm;
- Plate dimensions: 150mmX80mm;
- Rack focus with 60mm range;

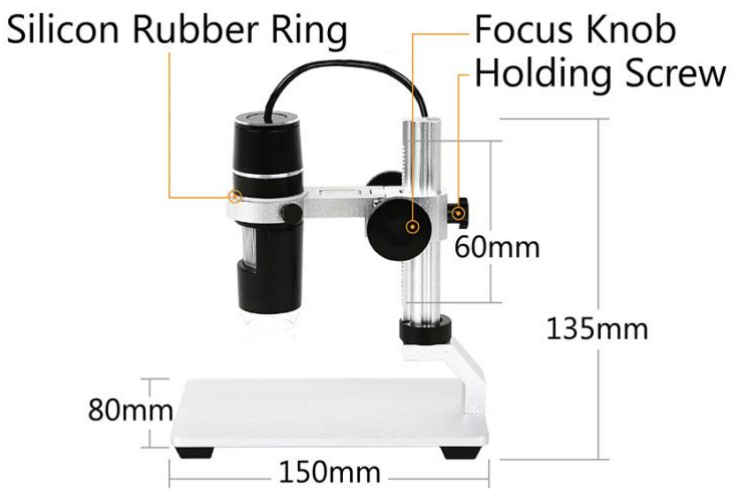

TOUPTEK PHOTONICS
WE KNOW IMAGES, WE MAKE CAMERAS

11.3 M-SD-HM3 Potable Microscope Stand

Plastic stand (Plastic) for potable microscope with focus mount has the following basic characteristic

- Plastic plate with aluminum alloy pole;
- Focus knob inherited from the traditional microscope allow for precise focus;
- Bayonet mount to install the potable microscope at ease;
- Holding screw to hold the microscope;
- Stable to ensure capturing video and image;
- Overall dimensions: 175mmX120mmX180mm;
- Plate dimensions: 175mmX120mm;
- Focus range: 113mm;
- Fine focus range 19mm

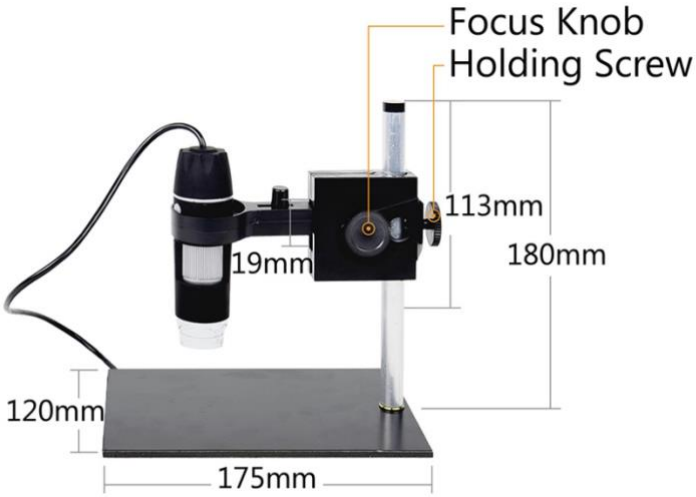

TOUPTEK PHOTONICS
WE KNOW IMAGES, WE MAKE CAMERAS

11.4 M-SD-HM4 Potable Microscope Stand

The track stand (Metal) for potable microscope with focus mount has the following basic characteristic

- Oxidized silver aluminum alloy;
- Focus knob inherited from the traditional microscope to focus at ease;
- Holding screw to hold the microscope;
- Stable to ensure capturing the clear video and image;
- Overall dimensions: 150mmX80mmX135mm;
- Plate dimensions: 150mmX80mm;
- Rack focus with 60mm range;
- Holding ring diameter *Φ*33mm;

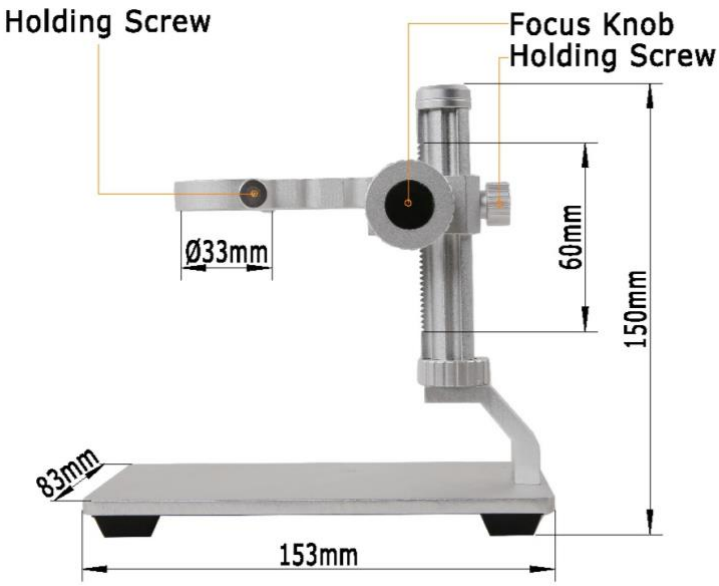

TOUPTEK PHOTONICS
WE KNOW IMAGES, WE MAKE CAMERAS

11.5 M-SD-HM5 Potable Microscope Stand

The track stand (Metal) for handheld microscope with focus mount has the following basic characteristic

- Oxidized silver aluminum alloy;
- Focus knob inherited from the traditional microscope to focus at ease;
- Holding screw to hold the microscope;
- Stable to ensure capturing the clear video and image;
- Overall dimensions: 153mmX83mmX200mm;
- Plate dimensions: 153mmX83mm;
- Rack focus with 110mm range;
- Holding ring diameter Φ41mm;

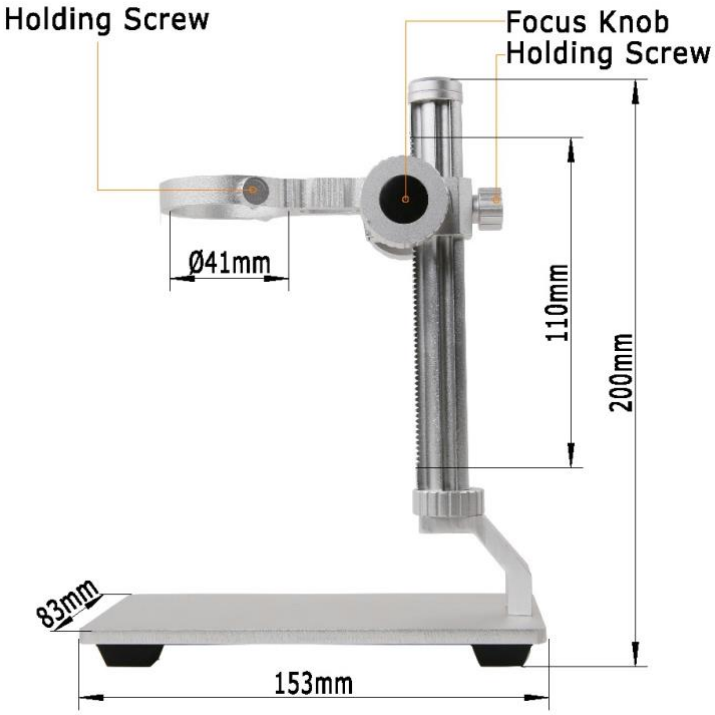

TOUPTEK PHOTONICS
WE KNOW IMAGES, WE MAKE CAMERAS

12 ToupTek®-- Contact Information

	杭州图谱光电科技有限公司	
	杭州市西湖区西园五路 6 号奥强大厦 1 号楼 15 层	
	杭州, 310030, 浙江,	
	中国	
	Hangzhou ToupTek Photonics Co., Ltd	
	15F, Aoqiang Building 1, No. 6, Xiyuan 5th Rd.,	
	Hangzhou, 310030, Zhejiang,	
	P.R.China	
	+86-571-8111-0735 +86-571-8111-0730 +86-571-8810-2638, +86-18058780750 (手机/Mobile Phone)	
	FAX: +86-571-8668-3738	
	tphz@touptek.com	
	Skype:	18058780750/ToupTek Photonics
	Q Q	2426878316
	Wechat	18058780750

Telephone:

+86-571-8111-0735

+86-571-8111-0730

+86-571-8810-2638,

+86-18058780750 (Mobile Phone)

FAX

+86-571-8668-3738

E-mail

tphz@touptek.com

IM

Skype: yufeihong

Q Q: 875502086